Technician License Course

KE6HEC February 11, 2021

Chapter 4 Part 2

Technician License Course

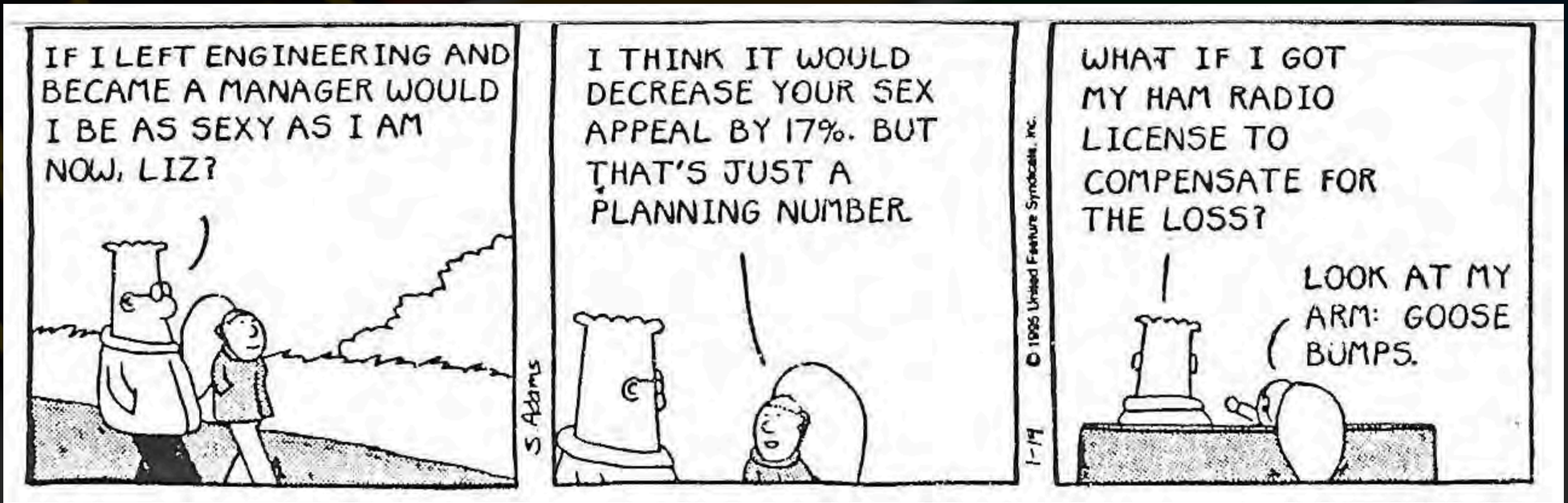

Technician License Course

Chapter 4

Lesson Plan Module - 9

Feed Lines & SWR

Feed Lines

- The purpose of the feed line is to get RF power from your station to the antenna.
- Basic feed line types
  - *Coaxial cable* (coax)
  - *Open-wire line* (OWL) also called ladder line or window line
- Power lost as heat in the feed line is called *loss* and it increases with frequency.

Feed Line Vocabulary

- **Center conductor**: Central wire
- **Dielectric**: Insulation surrounding center conductor
- **Shield**: Braid or foil surrounding dielectric
- **Jacket**: Protective outer plastic coating
- **Forward (reflected) power**: RF power traveling toward (away from) a load such as an antenna

Coaxial Cable

- Most common feed line
- Easy to use
- Not affected by nearby materials
- Has higher loss than open-wire line at most frequencies
- Air-insulated “hard line” has lowest loss

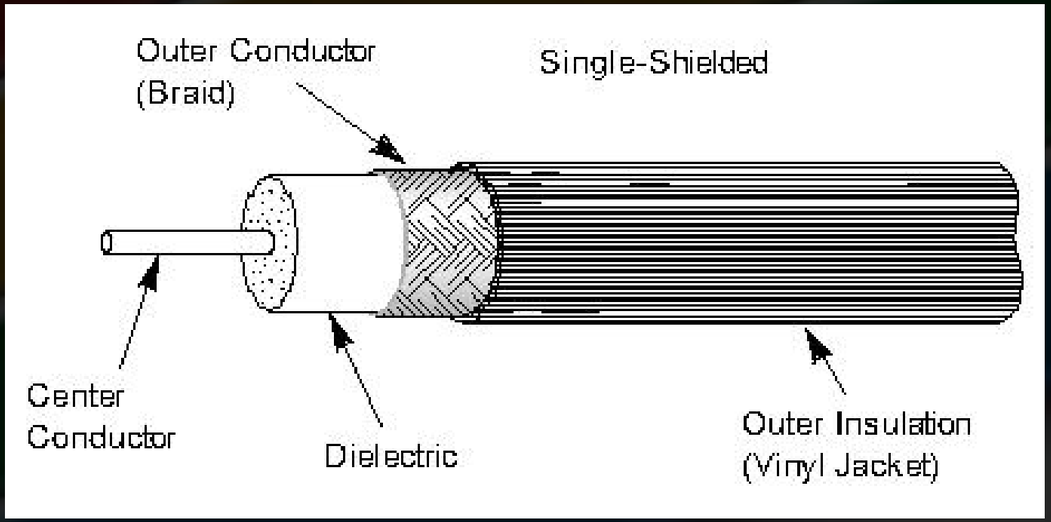

Open-Wire Line

- Lighter and less expensive than coax
- Has lower loss than coax at most frequencies
- More difficult to use since it is affected by nearby materials
- Requires impedance matching equipment to use with most transceivers

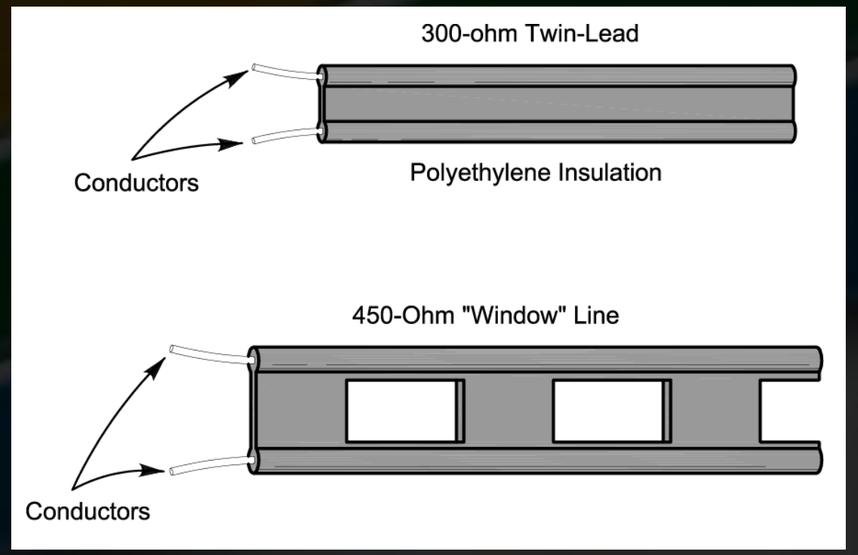

Characteristic Impedance

- The impedance presented to a wave traveling through a feed line
- Given in ohms (Ω), symbolized as Z_0
- Depends on how the feed line is constructed and what materials are used
  - Coax: 50 and 75 Ω
  - OWL: 300, 450, and 600 Ω

Standing Wave Ratio (SWR)

- If the antenna feed point and feed line impedances are not identical, some RF power is reflected back toward the transmitter.
  - Called a *mismatch*
  - Forward and reflected waves create a pattern of *standing waves* of voltage and current in the line
  - SWR is the ratio of standing wave max to min
- Measured with an *SWR meter* or *SWR bridge*

Standing Wave Ratio (SWR)

- Reflected power is re-reflected at the transmitter and bounces back and forth.
  - Some RF power is lost as heat on each trip back and forth through the feed line
  - All RF power is eventually lost as heat or transferred to the antenna or load
- High SWR means more reflections and more loss of RF power (less transferred to the antenna or load).

Nothing Is Perfect

- SWR above 3:1 is considered high in most cases.
- Erratic SWR readings may indicate a faulty feed line, faulty feed line connectors, or a faulty antenna.
- High SWR can be corrected by
  - Tuning or adjusting the antenna
  - With impedance matching equipment at the transmitter
    - Called an *antenna tuner* or *transmatch*
    - Does not change SWR in the feed line

Adjusting SWR

- An SWR meter is inserted in the feed line and indicates the mismatch at that point.
- Either adjust the antenna to minimize the reflected power or adjust the antenna tuner for minimum SWR at the transceiver.

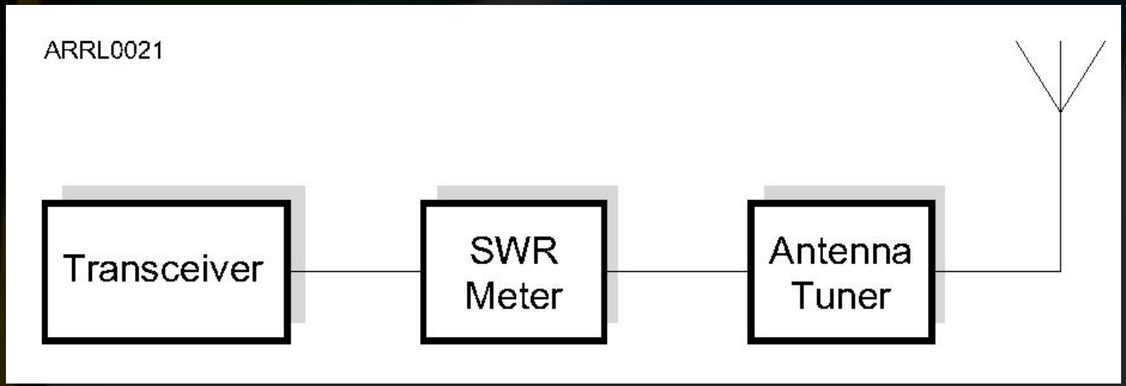

Dummy Loads

- A dummy load is a resistor and a heat sink
- Used to replace an antenna or other piece of equipment during testing.
- Dummy loads dissipate signals in the feed line as heat
- Allows transmitter testing without sending a signal over the air
- Helpful in troubleshooting an antenna system

Practice Questions

What can happen if the antennas at opposite ends of a VHF or UHF line of sight radio link are not using the same polarization?

What can happen if the antennas at opposite ends of a VHF or UHF line of sight radio link are not using the same polarization?

Signals could be significantly weaker

What type of wave carries radio signals between transmitting and receiving stations?

What type of wave carries radio signals between transmitting and receiving stations?

Electromagnetic

What is a common effect of "skip" reflections between the Earth and the ionosphere?

What is a common effect of "skip" reflections between the Earth and the ionosphere?

The polarization of the original signal is randomized

What property of a radio wave is used to describe its polarization?

What property of a radio wave is used to describe its polarization?

The orientation of the electric field

What are the two components of a radio wave?

What are the two components of a radio wave?

Electric and magnetic fields

What is the approximate amount of change, measured in decibels (dB), of a power increase from 5 watts to 10 watts?

What is the approximate amount of change, measured in decibels (dB), of a power increase from 5 watts to 10 watts?

3 dB

What is the approximate amount of change, measured in decibels (dB), of a power decrease from 12 watts to 3 watts?

What is the approximate amount of change, measured in decibels (dB), of a power decrease from 12 watts to 3 watts?

-6 dB

What is the approximate amount of change, measured in decibels (dB), of a power increase from 20 watts to 200 watts?

What is the approximate amount of change, measured in decibels (dB), of a power increase from 20 watts to 200 watts?

10 dB

What is a usual name for electromagnetic waves that travel through space?

What is a usual name for electromagnetic waves that travel through space?

Radio waves

What is the primary purpose of a dummy load?

What is the primary purpose of a dummy load?

To prevent the radiation of signals when making tests

What, in general terms, is standing wave ratio (SWR)?

What, in general terms, is standing wave ratio (SWR)?

A measure of how well a load is matched to a transmission line

What reading on an SWR meter indicates a perfect impedance match between the antenna and the feed line?

What reading on an SWR meter indicates a perfect impedance match between the antenna and the feed line?

1 to 1

What is the approximate SWR value above which the protection circuits in most solid-state transmitters begin to reduce transmitter power?

What is the approximate SWR value above which the protection circuits in most solid-state transmitters begin to reduce transmitter power?

2 to 1

What does an SWR reading of 4:1 indicate?

What does an SWR reading of 4:1 indicate?

Impedance mismatch

What happens to power lost in a feed line?

What happens to power lost in a feed line?

It is converted into heat

Which of the following is a common use of coaxial cable?

Which of the following is a common use of coaxial cable?

Carrying RF signals between a radio and antenna

What does a dummy load consist of?

What does a dummy load consist of?

A non-inductive resistor and a heat sink

What is true of the electric field in vertical antennas?

What is true of the electric field in vertical antennas?

The electric field is perpendicular to the Earth

What is meant by the gain of an antenna?

What is meant by the gain of an antenna?

The increase in signal strength in a specified direction when compared to a reference antenna

Why is it important to have a low SWR in an antenna system that uses coaxial cable feed line?

Why is it important to have a low SWR in an antenna system that uses coaxial cable feed line?

To allow the efficient transfer of power and reduce losses

What is the impedance of the most commonly used coaxial cable in typical amateur radio installations?

What is the impedance of the most commonly used coaxial cable in typical amateur radio installations?

50 ohms

Why is coaxial cable used more often than any other feed line for amateur radio antenna systems?

Why is coaxial cable used more often than any other feed line for amateur radio antenna systems?

- It is easy to use and requires few special installation considerations

What generally happens as the frequency of a signal passing through coaxial cable is increased?

What generally happens as the frequency of a signal passing through coaxial cable is increased?

The loss increases

What might cause erratic changes in SWR readings?

What might cause erratic changes in SWR readings?

A loose connection in an antenna or a feed line

Which of the following types of feed line has the lowest loss at VHF and UHF?

Which of the following types of feed line has the lowest loss at VHF and UHF?

Air-insulated hard line

Technician License Course

Chapter 4
Lesson Plan Module -

10

Practical Antennas

The Dipole

- Most basic antenna
- Total length is ½ wavelength (½ l)
- Usual construction:
  - Two equal halves of wire, rod, or tubing
  - Feed line connected in the middle
- Length (in feet) usually estimated
  - 468 / frequency (in MHz) – often too short

The Dipole

- Radiates strongest broadside to the dipole, weakest off the ends
- If oriented horizontally, the radiated waves are horizontally polarized
- 3D radiation pattern looks like a donut or bagel
  - This is a *free-space* picture

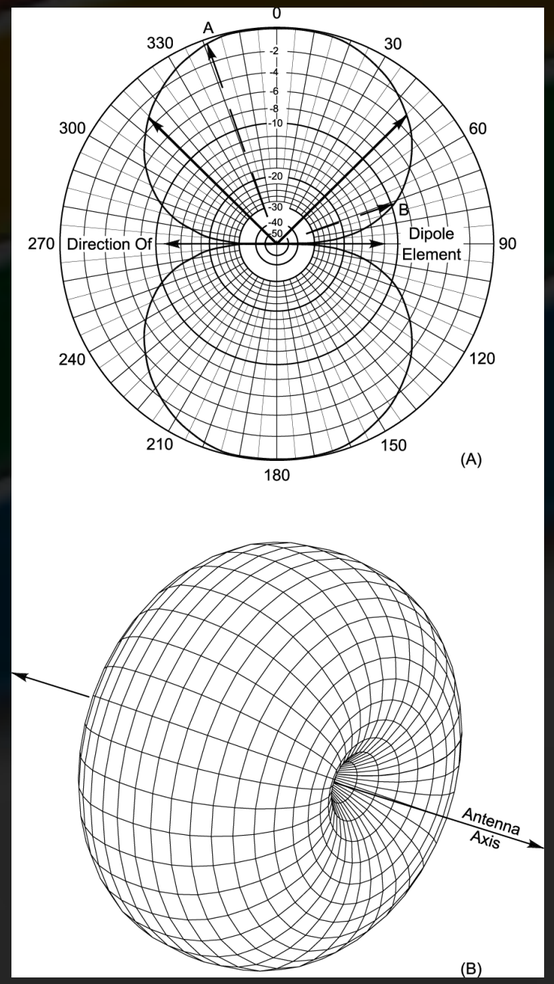

The Ground-Plane

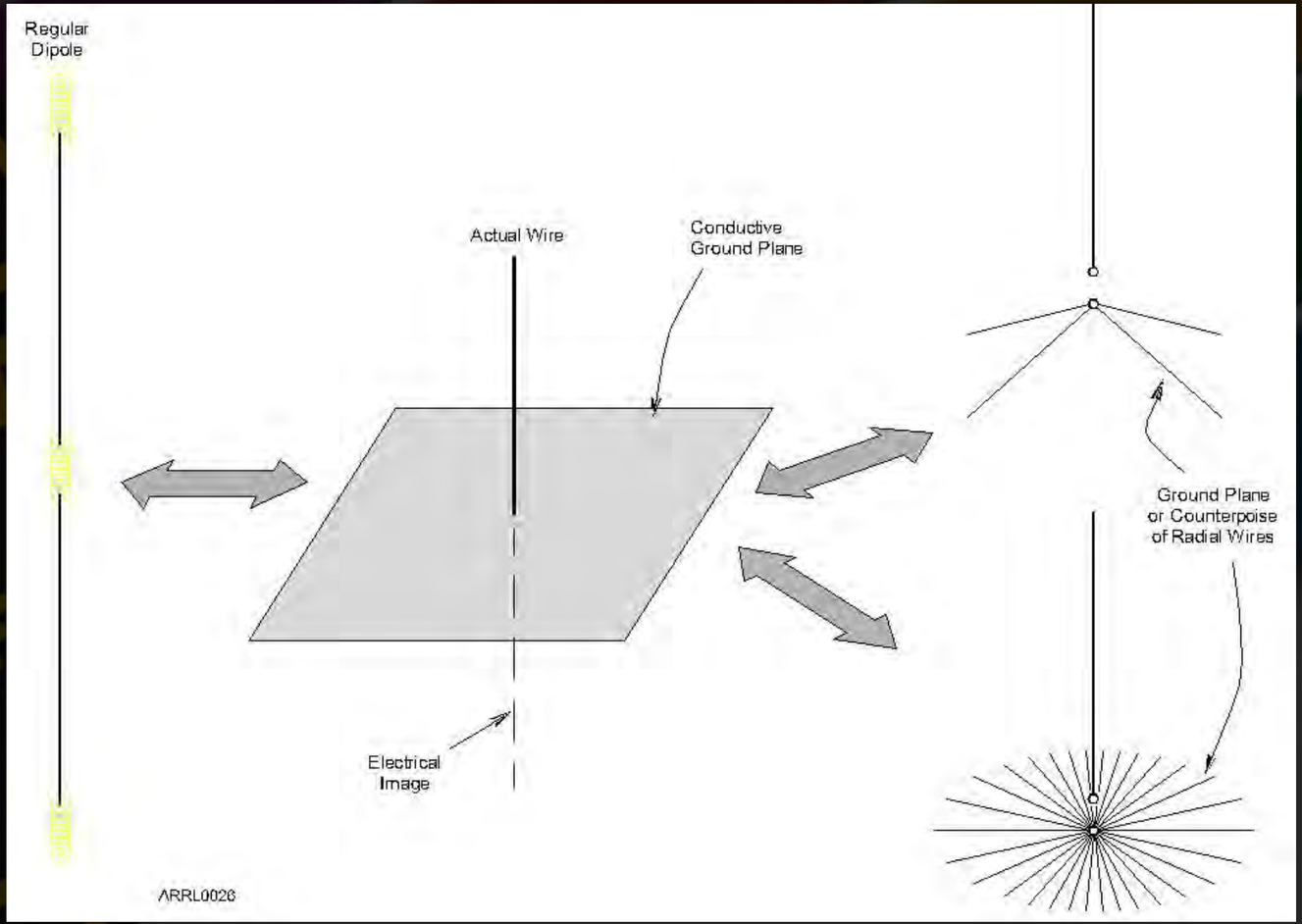

The Ground-Plane

- One-half of a dipole (1/4-wavelength long) oriented perpendicularly to a *ground plane* that acts as an “electrical mirror”
  - Replaces the dipole’s missing half
- Any conducting surface can act as the ground-plane, including the ground!
  - Car roof or trunk, or other metal surface
  - Radial wires

The Rubber Duck

- Coiled wire coated in tough plastic
- Convenient size, rugged enough for handheld use
- The radio and operator make up the ground plane
- Small size equals compromise performance
  - Hold vertically to maximize range
- Doesn’t work well inside vehicles due to metal body shielding signal
- For mobile use, replace rubber duck with an external magnet-mount or permanent antenna

Dipole Construction

- Start with excess length (490 / f) and adjust
- To raise resonant frequency, shorten each half equally

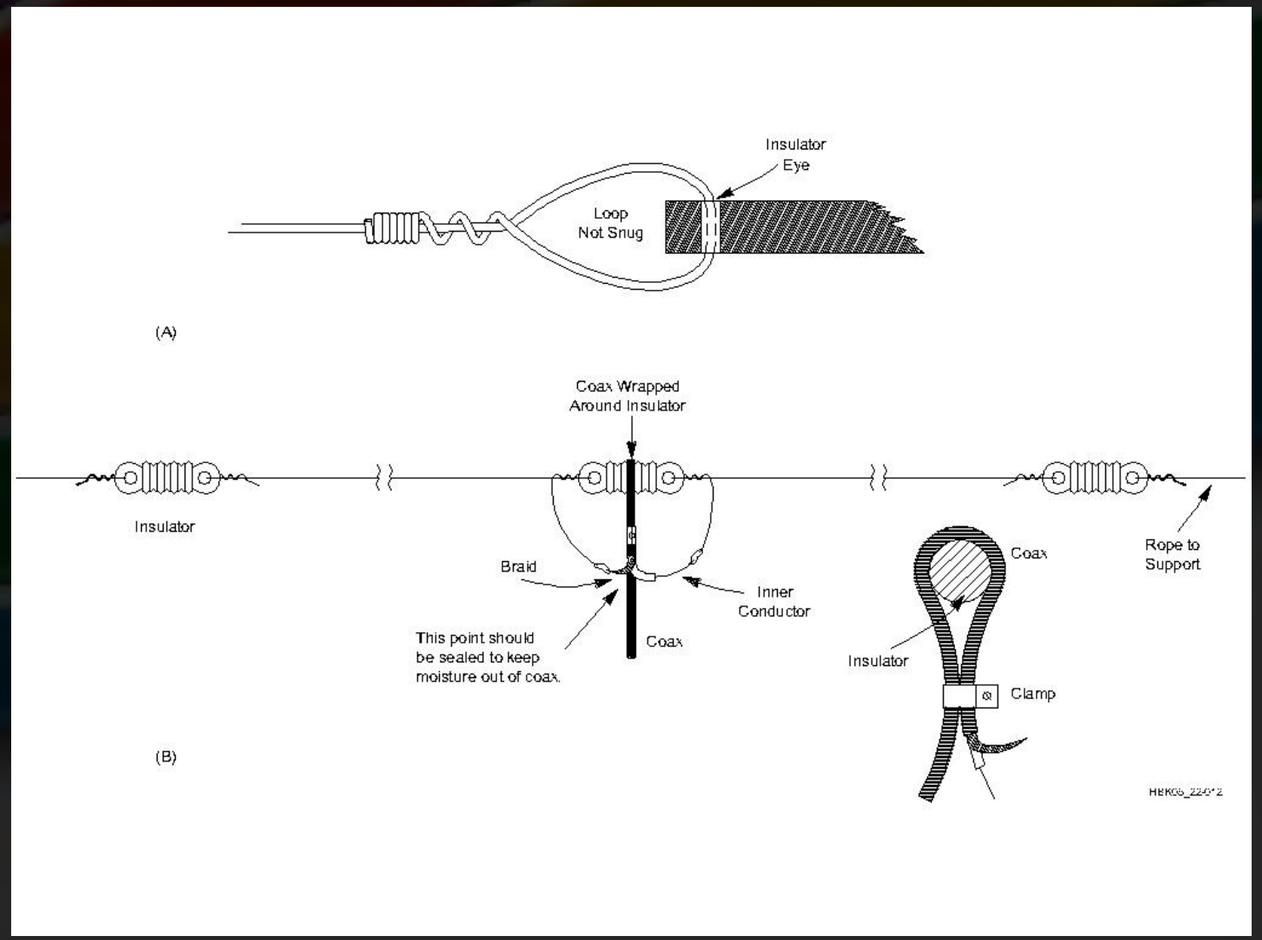

Ground-Plane Construction

- Length (in feet) usually estimated
  - 234 / frequency (in MHz) – often short, start long and trim to length
  - Thickness of whip or rod also affects calculated length
- Vertical ground-plane antennas are omni-directional
  - Mount mobile whips in center of roof or trunk for best coverage

Ground-Plane Construction

- Lengthening a ¼-wavelength VHF/UHF ground-plane to 5/8 wavelengths focuses more signal toward the horizon which usually improves range.
- At HF, vertical antenna size is quite large.
  - 40 meter ¼-wavelength whip is about 32 feet
  - Inserting an inductor makes the antenna longer electrically
  - Reduces physical length required

Directional (Beam) Antennas

- Beam antennas focus or direct RF energy in a desired direction.
  - Gain improves range
  - Reduces reception in unwanted directions
  - Reduces interference to and from other stations
- Directional characteristics are the same for receiving as they are for transmitting.

Directional (Beam) Antennas

Yagi

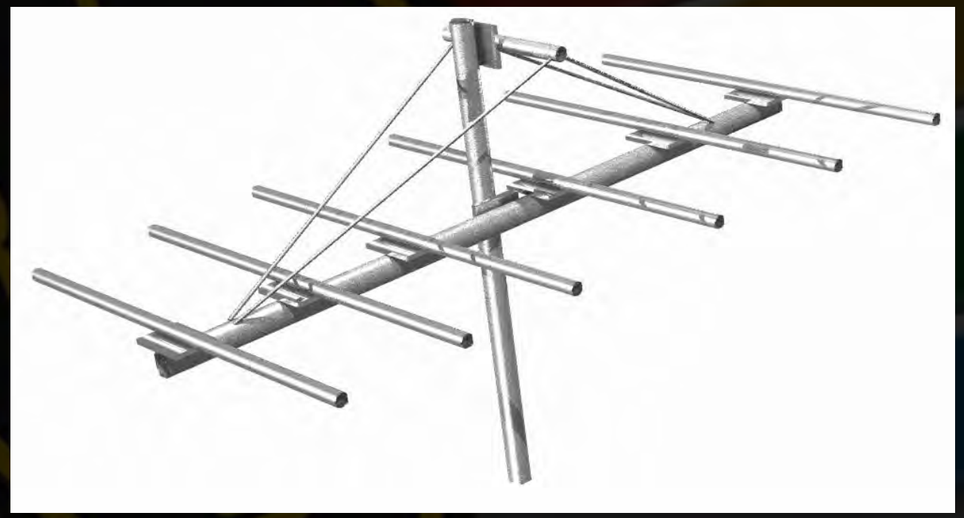

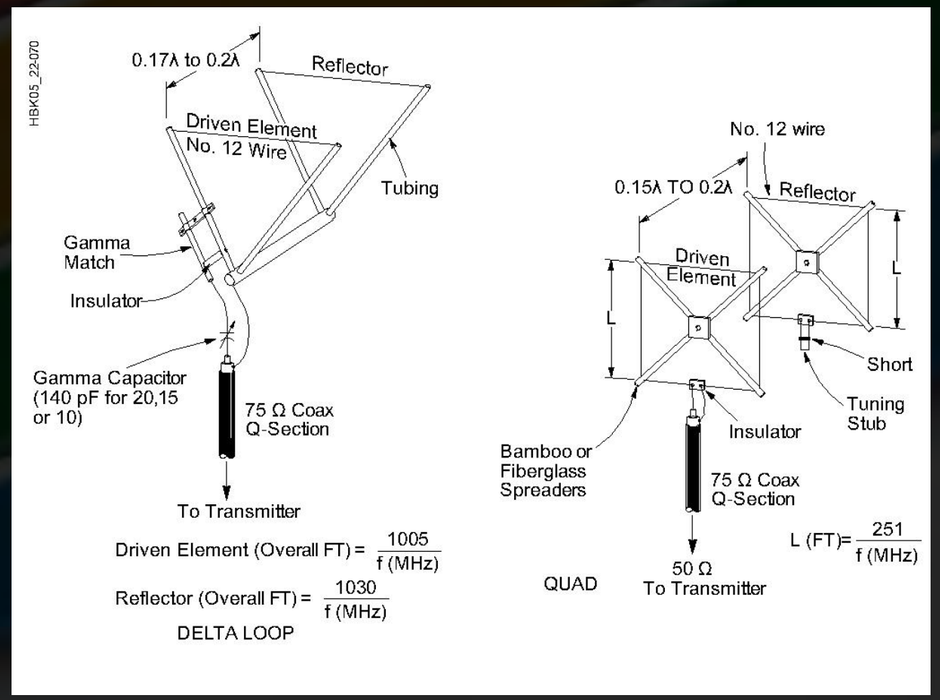

Quads

Directional (Beam) Antennas

- Used for “DXing” to obtain maximum range for contacts
- Can be used at VHF/UHF to avoid multi-path and bypass obstructions
  - Use vertical elements for repeaters and FM simplex contacts
  - Use horizontal elements for CW and SSB contacts to reduce ground losses

Directional (Beam) Antennas

- At microwave frequencies (above 1 GHz) it becomes practical to use a dish antenna
- Short wavelength
- High gain
- Small size

Practical Feed Lines

- Coaxial cables
  - Larger diameter cables have lower loss
    - Loss is measured in dB/foot
    - Loss increases with frequency
  - Keep water out! Protect the jacket from cuts and cracks and ultraviolet exposure.
    - Some cable is UV-rated

Common Coaxial Cables

- RG-174: miniature, short connections only
- RG-58: 0.2" OD, lossy at VHF/UHF
- RG-8X: 0.25" OD, good through low VHF
- RG-8/RG-213; 0.4" OD, used through UHF
- Hard line: ½" to multiple inch OD, used through microwave
- Most coax is 50 Ω or 75 Ω

Coaxial Connectors

- UHF - SO-239/PL-259
- BNC
- N
- SMA
- F (cable TV)

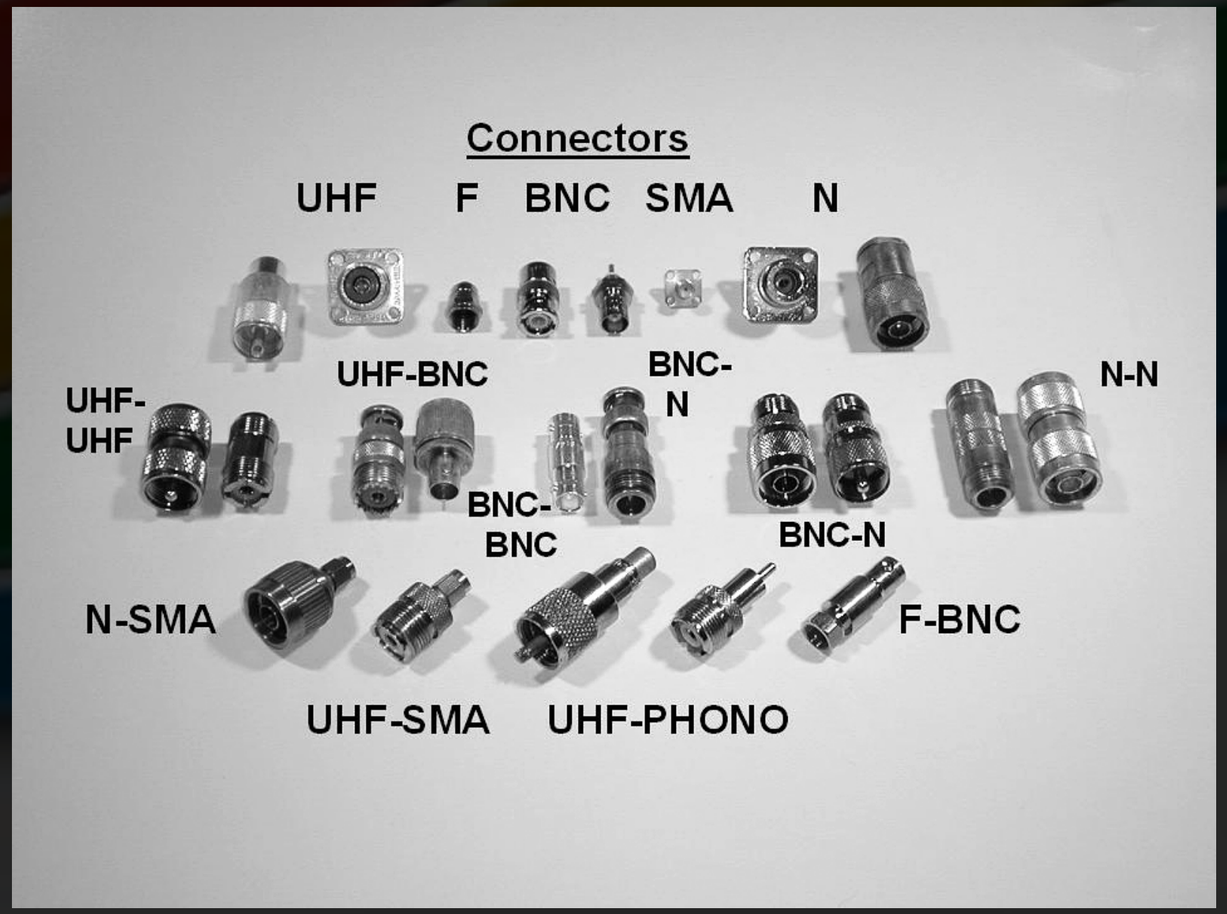

Installing Coaxial Connectors

- Soldering is the traditional way
  - Use rosin-core solder and avoid “cold” solder joints
  - See *The Art of Soldering* on the ARRL website
- Crimp connectors are becoming widely used by hams
  - Obtain and learn to use proper crimping tools

Waterproofing Connectors

- **MUST** be waterproofed for use outdoors
  - Type N are waterproof but still usually protected anyway
- Use good-quality electrical tape first, then a layer of self-vulcanizing tape, then another covering of electrical tape
- Air-core coaxial cable requires special connectors and techniques to waterproof

Practical Feed Lines

- Open-wire feed lines
  - Flexing will eventually break conductors
  - Vulnerable to abrasion and twisting
  - Rain, snow, and ice do affect the line
  - Lower loss than coax, generally
  - Higher impedance may complicate use

Wattmeters

- Most wattmeters are *directional*
  - Sensitive to direction of power flow
  - Read forward and reflected power
  - Use a sensing element
- SWR is computed from power values
  - Table or formula

SWR Meters

- Measure SWR directly by sensing power flow in the line
- Usually installed at the transmitter

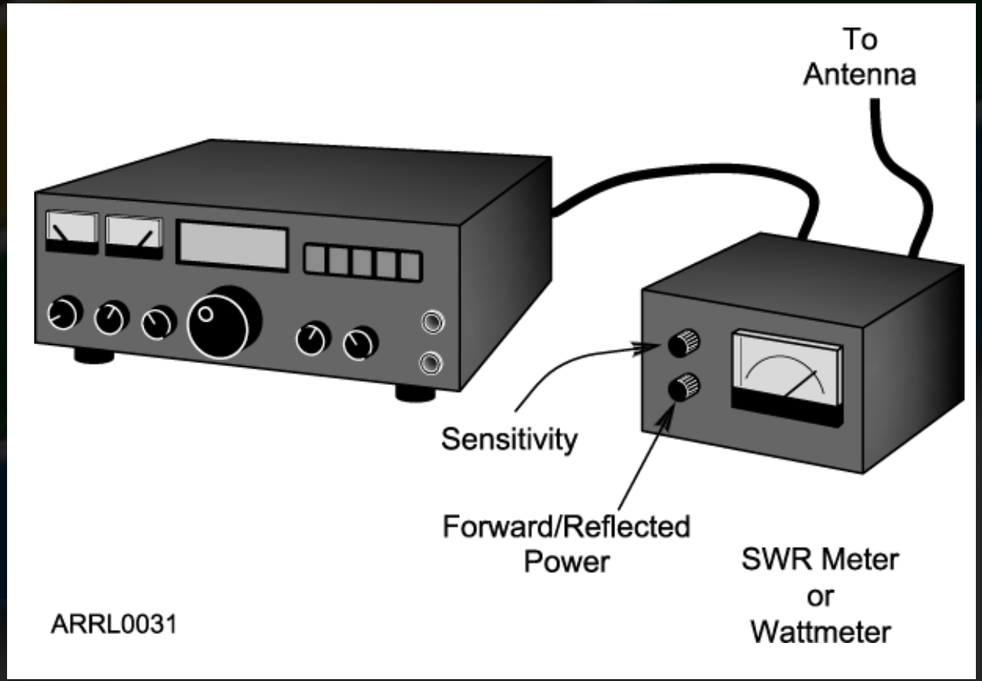

Antenna Tuners

- Don’t really “tune the antenna”
- Transform impedances at the end of the feed line to 50 Ω which reduces SWR to 1:1
  - Antenna feed point impedance unchanged
  - Feed line SWR unchanged
- Also called *impedance matchers, transmatches, matchboxes,* other trade names

How to Use an Antenna Tuner

- Transmit a low-power signal
- Monitor the SWR meter
- Adjust the tuner until minimum SWR is achieved

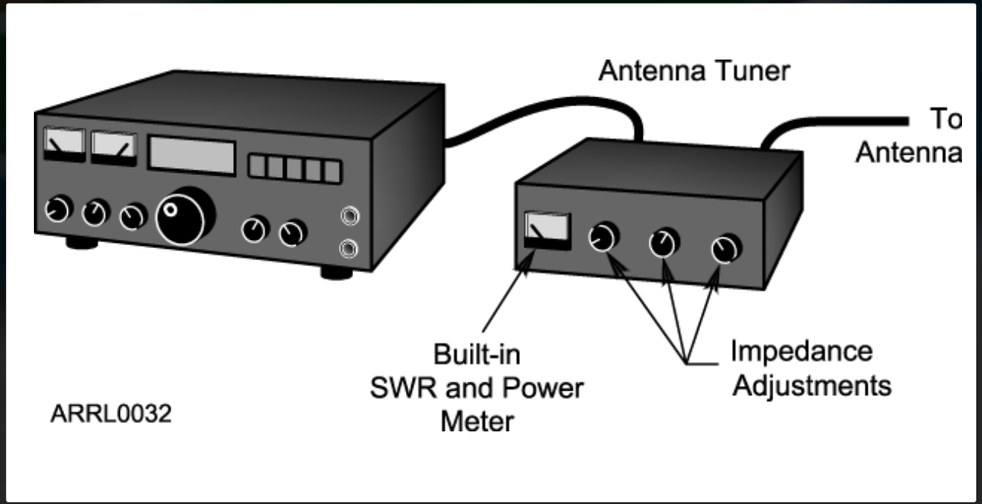

Antenna Analyzers

- Low-power signal source, frequency counter, and SWR meter in one package
- Makes antenna and cable measurements without transmitting a full-power signal
- Available for HF through UHF and microwave
- Very handy for adjusting and troubleshooting antennas and feed lines

Practice Questions

What antenna polarization is normally used for long-distance weak-signal CW and SSB contacts using the VHF and UHF bands?

What antenna polarization is normally used for long-distance weak-signal CW and SSB contacts using the VHF and UHF bands?

Horizonta
l

When using a directional antenna, how might your station be able to access a distant repeater if buildings or obstructions are blocking the direct line of sight path?

When using a directional antenna, how might your station be able to access a distant repeater if buildings or obstructions are blocking the direct line of sight path?

Try to find a path that reflects signals to the repeater

Where should an in-line SWR meter be connected to monitor the standing wave ratio of the station antenna system?

Where should an in-line SWR meter be connected to monitor the standing wave ratio of the station antenna system?

In series with the feed line, between the transmitter and antenna

Which of the following instruments can be used to determine if an antenna is resonant at the desired operating frequency?

Which of the following instruments can be used to determine if an antenna is resonant at the desired operating frequency?

An antenna analyzer

What instrument other than an SWR meter could you use to determine if a feed line and antenna are properly matched?

What instrument other than an SWR meter could you use to determine if a feed line and antenna are properly matched?

Directional wattmeter

Which of the following is the most common cause for failure of coaxial cables?

Which of the following is the most common cause for failure of coaxial cables?

Moisture contamination

Why should the outer jacket of coaxial cable be resistant to ultraviolet light?

Why should the outer jacket of coaxial cable be resistant to ultraviolet light?

Ultraviolet light can damage the jacket and allow water to enter the cable

What is a disadvantage of air core coaxial cable when compared to foam or solid dielectric types?

What is a disadvantage of air core coaxial cable when compared to foam or solid dielectric types?

It requires special techniques to prevent water absorption

Which of the following is a common use of coaxial cable?

Which of the following is a common use of coaxial cable?

Carrying RF signals between a radio and antenna

Which of the following types of solder is best for radio and electronic use?

Which of the following types of solder is best for radio and electronic use?

Rosin-core solder

What is the characteristic appearance of a cold solder joint?

What is the characteristic appearance of a cold solder joint?

A grainy or dull surface

What is a beam antenna?

What is a beam antenna?

An antenna that concentrates signals in one direction

Which of the following describes a simple dipole mounted so the conductor is parallel to the Earth’s surface?

Which of the following describes a simple dipole mounted so the conductor is parallel to the Earth’s surface?

A horizontally polarized antenna

What is a disadvantage of the “rubber duck” antenna supplied with most handheld radio transceivers?

What is a disadvantage of the “rubber duck” antenna supplied with most handheld radio transceivers?

It does not transmit or receive as effectively as a full-sized antenna

How would you change a dipole antenna to make it resonant on a higher frequency?

How would you change a dipole antenna to make it resonant on a higher frequency?

Shorten it

What type of antennas are the quad, Yagi, and dish?

What type of antennas are the quad, Yagi, and dish?

Directional antennas

What is a good reason not to use a “rubber duck” antenna inside your car?

What is a good reason not to use a “rubber duck” antenna inside your car?

Signals can be significantly weaker than when it is outside of the vehicle

What is the approximate length, in inches, of a quarter-wavelength vertical antenna for 146 MHz?

What is the approximate length, in inches, of a quarter-wavelength vertical antenna for 146 MHz?

19

What is the approximate length, in inches, of a 6 meter 1/2-wavelength wire dipole antenna?

What is the approximate length, in inches, of a 6 meter 1/2-wavelength wire dipole antenna?

112

In which direction is the radiation strongest from a half-wave dipole antenna in free space?

In which direction is the radiation strongest from a half-wave dipole antenna in free space?

Broadside to the antenna

What is a reason to use a properly mounted 5/8 wavelength antenna for VHF or UHF mobile service?

What is a reason to use a properly mounted 5/8 wavelength antenna for VHF or UHF mobile service?

It offers a lower angle of radiation than a 1/4 wavelength antenna and usually provides improved coverage

Why are VHF or UHF mobile antennas often mounted in the center of the vehicle roof?

Why are VHF or UHF mobile antennas often mounted in the center of the vehicle roof?

A roof mounted antenna normally provides the most uniform radiation pattern

Which of the following terms describes a type of “loading” when referring to an antenna?

Which of the following terms describes a type of “loading” when referring to an antenna?

Inserting an inductor in the radiating portion of the antenna to make it electrically longer

What does an antenna tuner do?

What does an antenna tuner do?

It matches the antenna system impedance to the transceiver's output impedance

Which of the following connectors is most suitable for frequencies above 400 MHz?

Which of the following connectors is most suitable for frequencies above 400 MHz?

A Type N connector

What is true of PL-259 type coax connectors?

What is true of PL-259 type coax connectors?

The are commonly used at HF frequencies

Why should coax connectors exposed to the weather be sealed against water intrusion?

Why should coax connectors exposed to the weather be sealed against water intrusion?

To prevent an increase in feed line loss

What electrical difference exists between the smaller RG-58 and larger RG-8 coaxial cables?

What electrical difference exists between the smaller RG-58 and larger RG-8 coaxial cables?

RG-8 cable has less loss at a given frequency

End of Chapter 4 part 2

End of Module 10