Technician License Course

KE6HEC February 11, 2021

Chapter 3 Part 2

Technician License Course

Chapter 3

Lesson Plan Module - 6

Electrical Components

Electronics – Controlling the Flow of Current

- To make an electronic device (like a radio) do something useful (like a receiver), we need to control and manipulate the flow of current.
- There are a number of different electronic components that are used to do this

Schematic Diagrams

- We can draw pictures of electronic components forming circuits, such as for the parallel and series circuit examples. This is too cumbersome for most circuits.
- Schematic diagrams use symbols with different components, each having a different symbol.

Schematic Diagrams

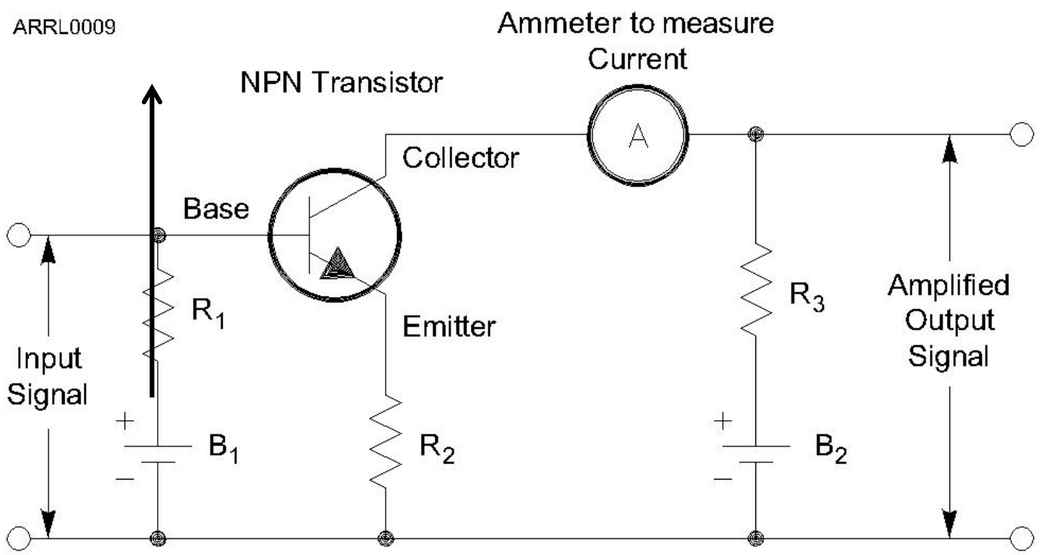

The lines and dots on schematics represent electrical connections between the components.

The Resistor

- The function of a resistor is to restrict the flow of current.
- Remember Ohm's Law:

  $I = E / R$

  $E = I \times R$

- Schematic symbol

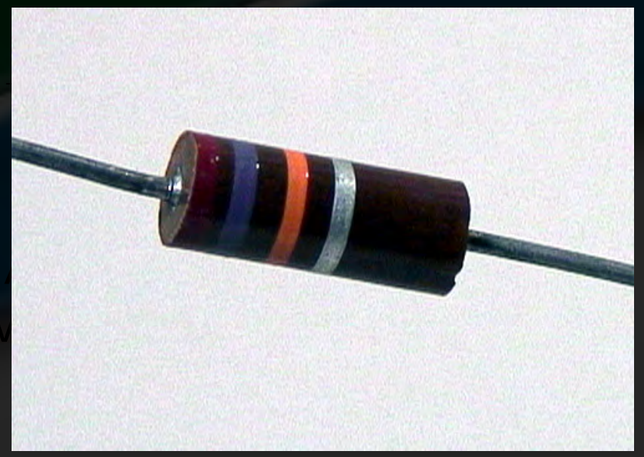

The Resistor

- The function of a resistor is to restrict the flow of current.
- Remember Ohm's Law:

$$E = I \times R$$

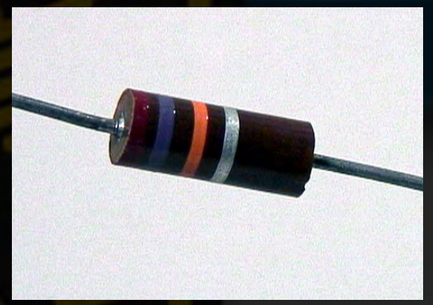

- Schematic

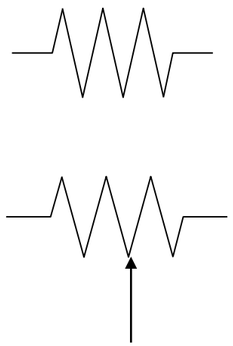

Potentiometer or "Pot"

Arrow indicates adjustable value, such as for a volume control.

The Capacitor

- The function of a capacitor is to store electrical energy – called *capacitance.*
  - –Acts like a battery
  - –Stores energy in an electric field created by voltage between the electrodes with insulating *dielectric* material between them

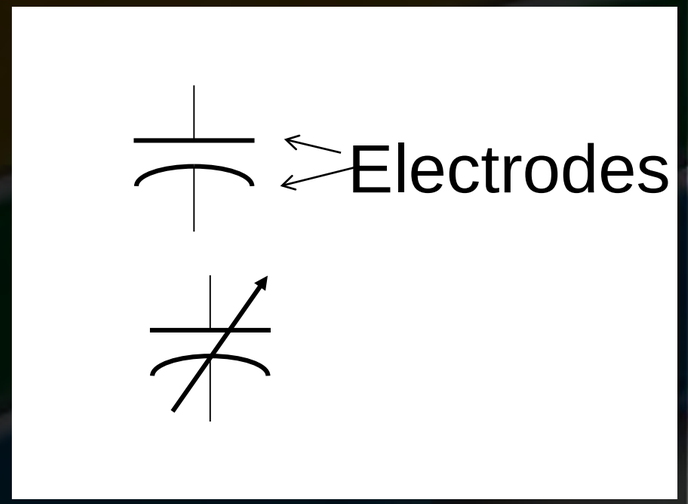

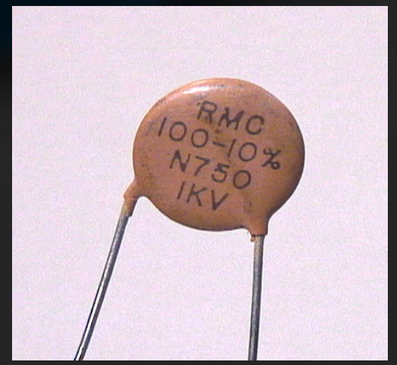

The Inductor

- The function of an inductor is to store magnetic energy – called *inductance.*
  - –A coil of wire around a *core* of air or magnetic material like iron or ferrite
  - –Stores energy in a magnetic field created by current in the wire

The Transformer

- A pair of inductors sharing a common core
  - Also share their magnetic field
  - Used to transfer energy from one circuit to another without a direct connection
  - Changes the ratio of voltage and current

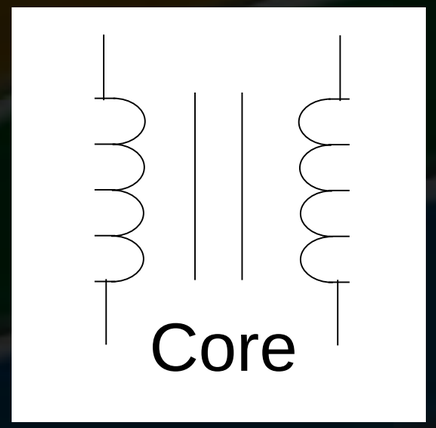

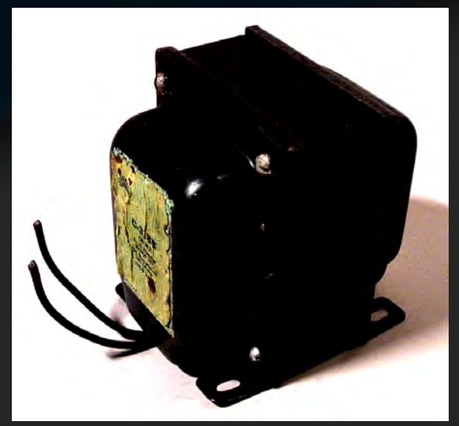

Electrical Units

- Each type of component has a value measured in specific units:
  - Resistors > resistance > ohms (Ω)
  - Capacitors > capacitance > farads (F)
  - Inductors > inductance > henrys (H)

Component Designators

- Each schematic symbol has a *designator* to denote which component it refers to. For example, the 10th resistor in a circuit is R10.
- Resistors (R), capacitors (C), inductors (L).

Indicators and Displays

- Indicators communicate status
  - ON/OFF, ready/stand-by, left/right
  - LEDs, light bulbs, symbols, audio tones
- Displays communicate values or text
  - Numeric values, warnings, messages
  - Digital and analog meters, LCD screens

Reactance

- Capacitors and inductors store energy, rather than dissipating it like resistors.
- Energy storage creates an effect called *reactance* (symbol *X*) that acts like a resistance in opposing the flow of ac current.
  - Capacitors create *capacitive reactance* (X_C)
  - Inductors create *inductive reactance* (X_L)
  - The effects of each are complementary

Impedance

- The combination of resistance (*R*) and reactance (*X*) is called *impedance*, represented by the symbol *Z*.
- Impedance represents a circuit's opposition to both ac and dc currents.

Resonance

- A component's reactance depends on frequency: X_L increases with frequency while X_C decreases.
- At the frequency for which a circuit's X_L and X_C are equal, their effects cancel. This is the circuit's *resonant frequency.*
- At *resonance*, a circuit has only resistance, which affects ac and dc current equally.

Resonant or Tuned Circuit

- Capacitors and inductors connected together create a *tuned circuit*.
  - When X_L and X_C are equal, the circuit is *resonant.*
  - If C or L are adjustable the resonant frequency can be varied or tuned.

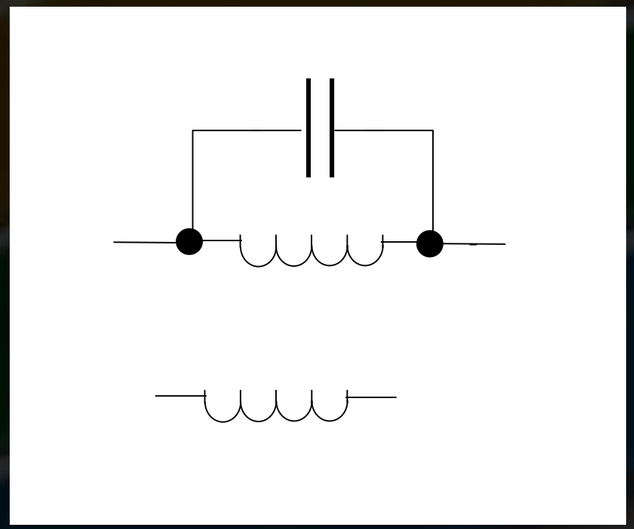

Semiconductor Components

- Made of material like silicon that are “OK” conductors but not as good as metals.
- Impurities added to semiconductors create material with more than usual electrons (*N-type)* and fewer than usual (*P-type*) electrons.
- Structures of N and P material can control current flow through the semiconductor.

The Diode

- Allows current to flow in only one direction.
  - Two electrodes: *anode* and *cathode*
  - AC current is changed to varying pulses of dc – called *rectification*
  - Diodes used to change ac power to dc power are called *rectifiers*

- Designator (D or CR)

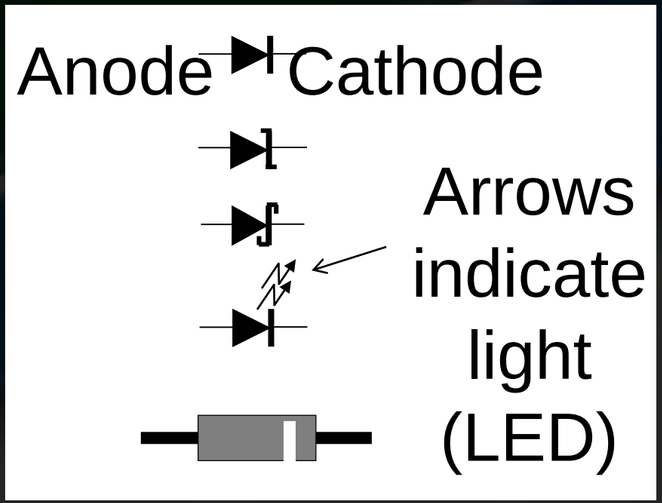

The Transistor

- The function of a transistor is to control large signals with small ones.
  - An “electronically controlled current valve”
  - When used as an amplifier a transistor produces *gain*
  - Transistors can also be used as a switch

- Designator (Q)

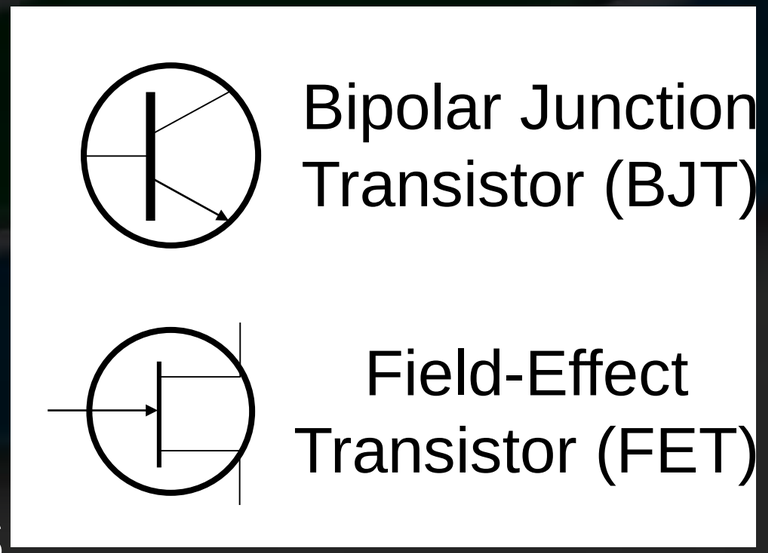

The Transistor

- The Bipolar Junction Transistor (BJT) has three layers of N or P material connected to electrodes:

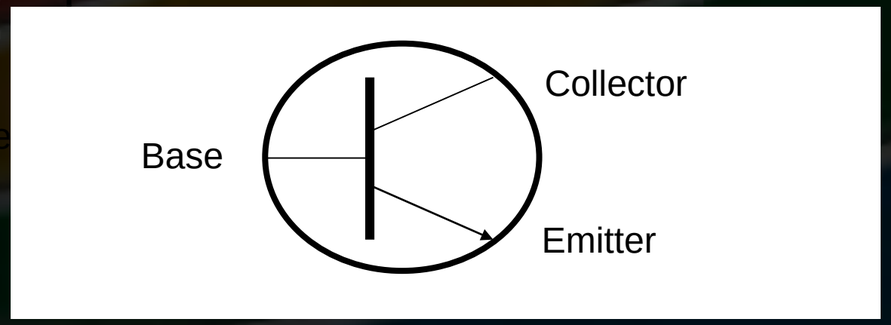

- Depending on the arrangement of layers, a BJT is either an NPN or PNP transistor.

The Transistor

- The Field-Effect Transistor (FET) has a conducting path or channel of N and P material connected to the drain and source electrodes.

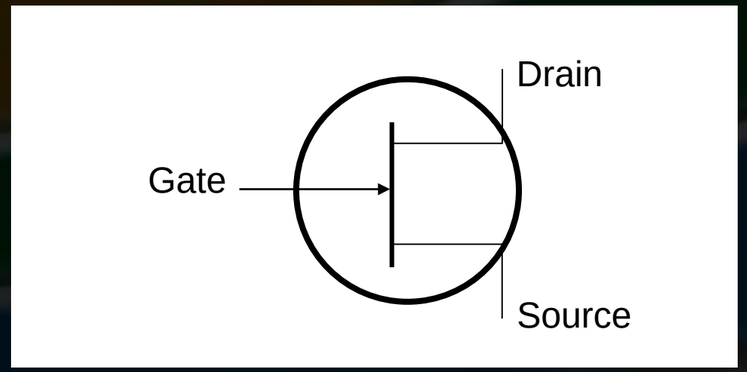

- Voltage applied to the gate electrode controls current through the channel.

The Integrated Circuit

- The integrated circuit is a collection of components contained in one device that accomplishes a specific task.

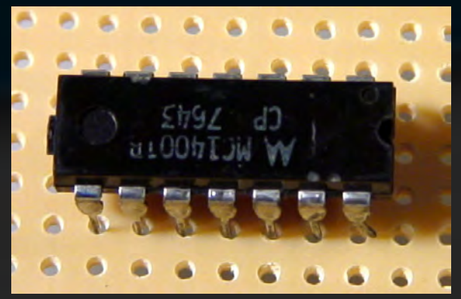

- Designator (IC or U)

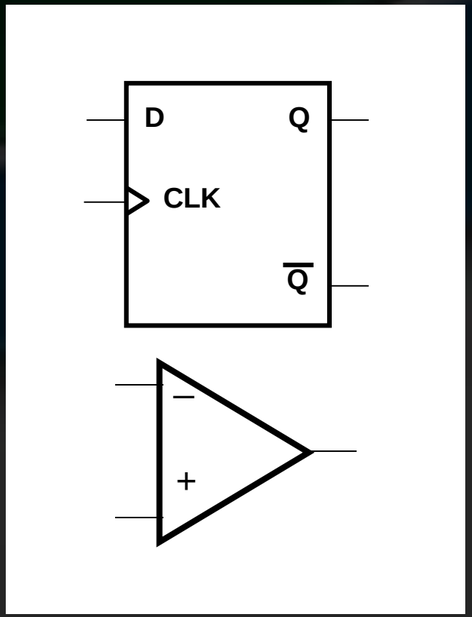

Protective Components

- Fuses and circuit breakers are designed to remove power in case of a circuit overload.
  - –Fuses blow – one time protection
  - –Circuit breakers trip – can be reset and reused
  - –Always use proper rating

- Designator (F or CB)

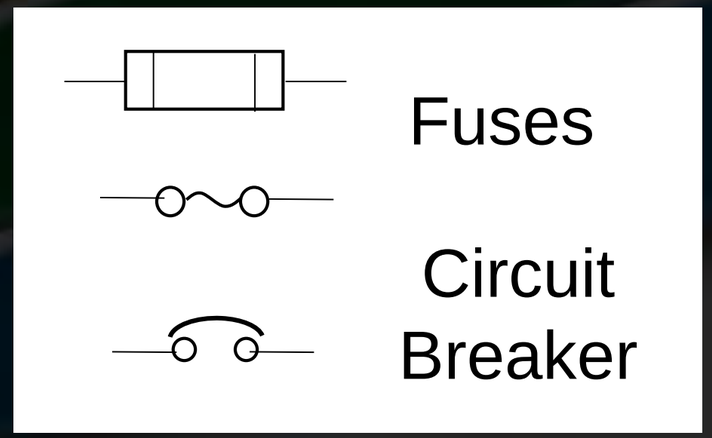

Switches

- Switches are used to interrupt or allow current to flow.
  - Each circuit controlled by the switch is a *pole*
  - Each position is called a *throw*
- Designator (S or SW)

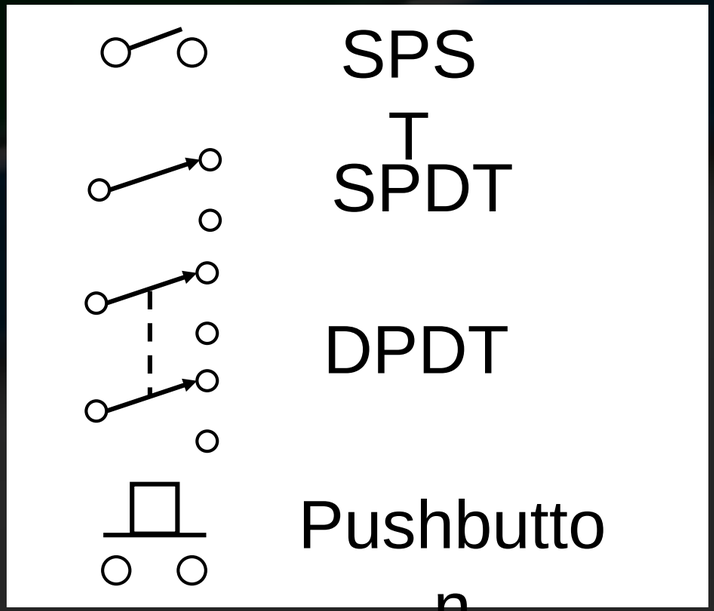

Relays

- Relays are switches activated by current in a coil (electromagnet)
  - Relays use the same pole/throw names as switches
  - The moving switch is called the *armature*
  - *Contacts* are named by when they are connected
- Designator (K or RLY)

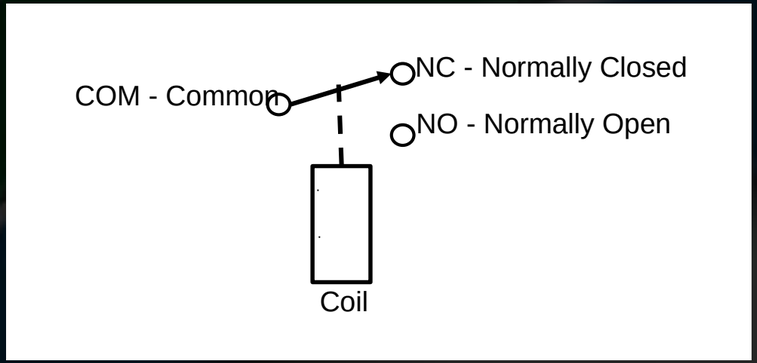

Other Circuit Symbols

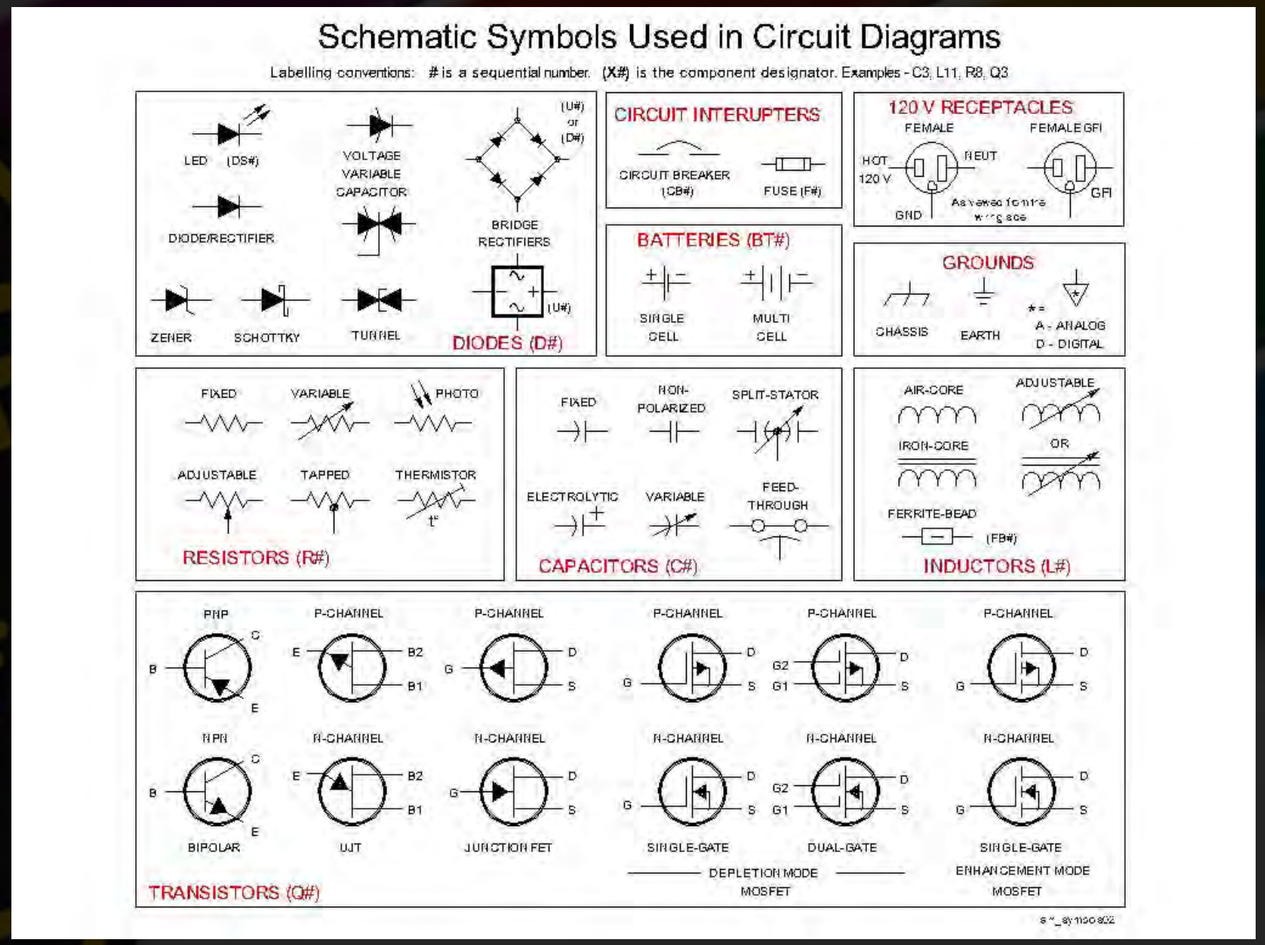

Oscillators and Amplifiers

- In this simple CW (Morse Code) transmitter, the oscillator provides a steady signal at one frequency

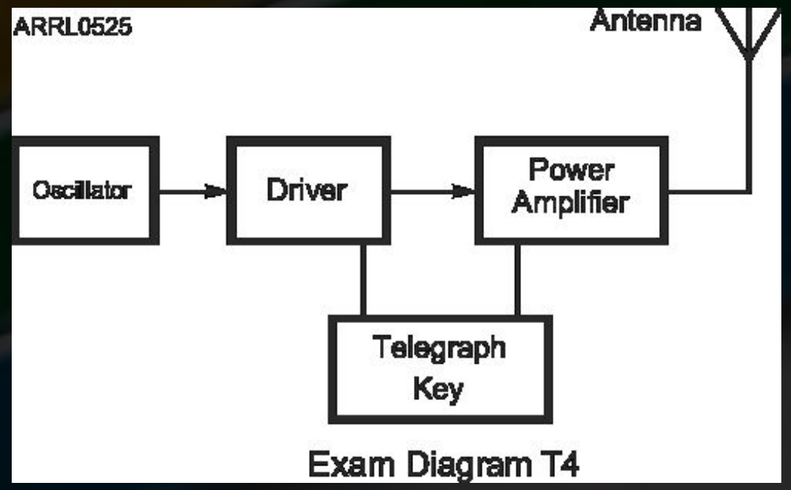

Oscillators and Amplifiers

- The Driver amplifies the signal from the Oscillator
- The output from the Driver is sent to the Power Amplifier to provide a signal strong enough for reliable communication

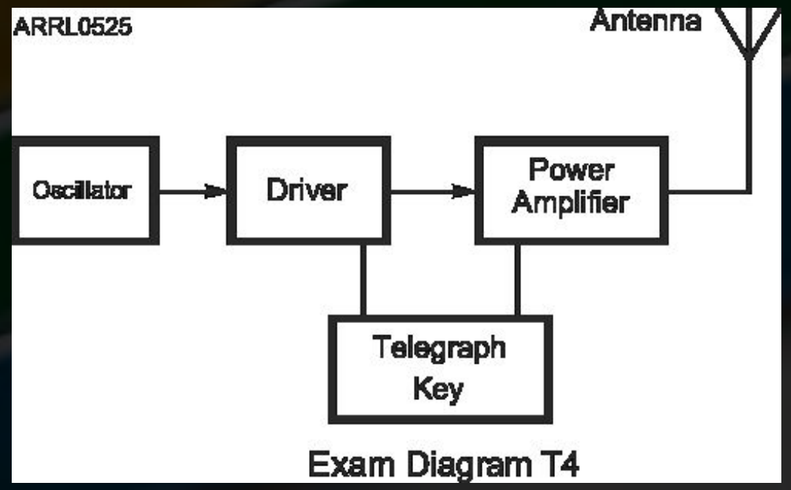

Oscillators and Amplifiers

- The Telegraph Key modulates the signal from the Driver
- Turning it off and on – creating the dots and dashes of Morse Code

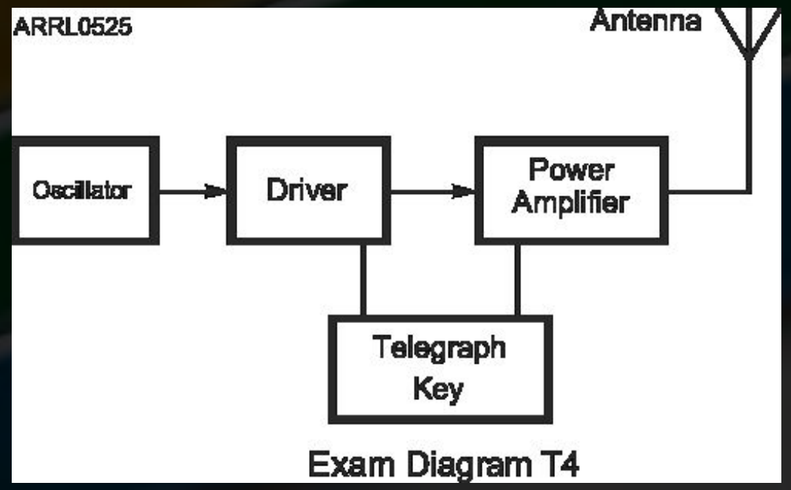

Mixers

- When two signals are combined, two additional signals are created – the sum and difference of the original signals.
- Mixers combine two signals to create a signal at a desired frequency.

Practice Questions

What is the ability to store energy in an electric field called?

Base

What is the ability to store energy in an electric field called?

Base

Capacitance

What is the basic unit of capacitance?

Base

What is the basic unit of capacitance?

Base

The farad

What is the ability to store energy in a magnetic field called?

Base

What is the ability to store energy in a magnetic field called?

Base

Inductance

What is the basic unit of inductance?

Base

What is the basic unit of inductance?

Base

The henry

What is meant by the term impedance?

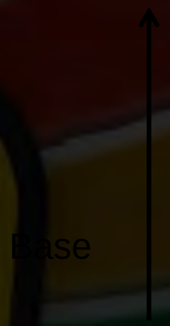

What is meant by the term impedance?

It is a measure of the opposition to AC current flow in a circuit

What are the units of impedance?

Base

What are the units of impedance?

Base

Ohms

What electrical component is used to oppose the flow of current in a DC circuit?

Base

What electrical component is used to oppose the flow of current in a DC circuit?

Base

Resistor

What type of component is often used as an adjustable volume control?

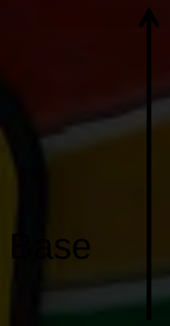

What type of component is often used as an adjustable volume control?

Base

Potentiometer

What electrical parameter is controlled by a potentiometer?

Base

What electrical parameter is controlled by a potentiometer?

Base

Resistance

What electrical component stores energy in an electric field?

Base

What electrical component stores energy in an electric field?

Base

Capacitor

What type of electrical component consists of two or more conductive surfaces separated by an insulator?

Base

What type of electrical component consists of two or more conductive surfaces separated by an insulator?

Base

Capacitor

What type of electrical component stores energy in a magnetic field?

Base

What type of electrical component stores energy in a magnetic field?

Base

Inductor

What electrical component is usually composed of a coil of wire?

Base

What electrical component is usually composed of a coil of wire?

Base

Inductor

What electrical component is used to connect or disconnect electrical circuits?

Base

What electrical component is used to connect or disconnect electrical circuits?

Base

Switch

What electrical component is used to protect other circuit components from current overloads?

Base

What electrical component is used to protect other circuit components from current overloads?

Base

Fuse

What class of electronic components is capable of using a voltage or current signal to control current flow?

Base

What class of electronic components is capable of using a voltage or current signal to control current flow?

Base

Transistors

What electronic component allows current to flow in only one direction?

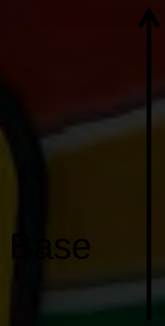

What electronic component allows current to flow in only one direction?

Base

Diode

Which of these components can be used as an electronic switch or amplifier?

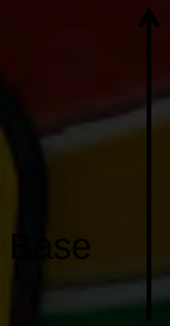

Which of these components can be used as an electronic switch or amplifier?

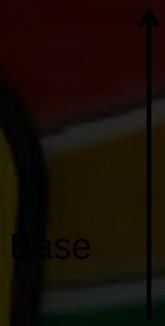

Transistor

Which of the following components can be made of three layers of semiconductor material?

Base

Which of the following components can be made of three layers of semiconductor material?

Transistor

Which of the following electronic components can amplify signals?

Base

Which of the following electronic components can amplify signals?

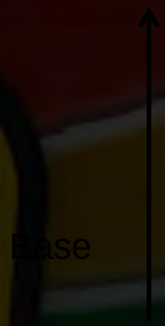

Transistor

How is the cathode lead of a semiconductor diode usually identified?

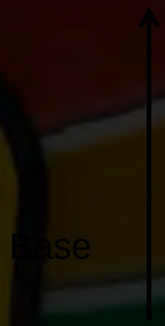

How is the cathode lead of a semiconductor diode usually identified?

Base

With a stripe

What does the abbreviation LED stand for?

Base

What does the abbreviation LED stand for?

Base

Light Emitting Diode

What does the abbreviation FET stand for?

Base

What does the abbreviation FET stand for?

Base

Field Effect Transistor

What are the names of the two electrodes of a diode?

Base

What are the names of the two electrodes of a diode?

Base

Anode and cathode

What are the three electrodes of a PNP or NPN transistor?

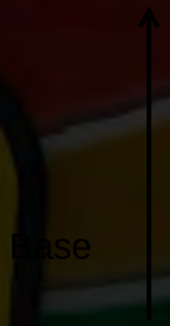

What are the three electrodes of a PNP or NPN transistor?

Emitter, base, and collector

What are the three electrodes of a field effect transistor?

Base

What are the three electrodes of a field effect transistor?

Base

Source, gate, and drain

What is the term that describes a transistor's ability to amplify a signal?

Base

What is the term that describes a transistor's ability to amplify a signal?

Base

Gain

What is the name for standardized representations of components in an electrical wiring diagram?

Base

What is the name for standardized representations of components in an electrical wiring diagram?

Base

Schematic symbols

What is component 1 in figure T1?

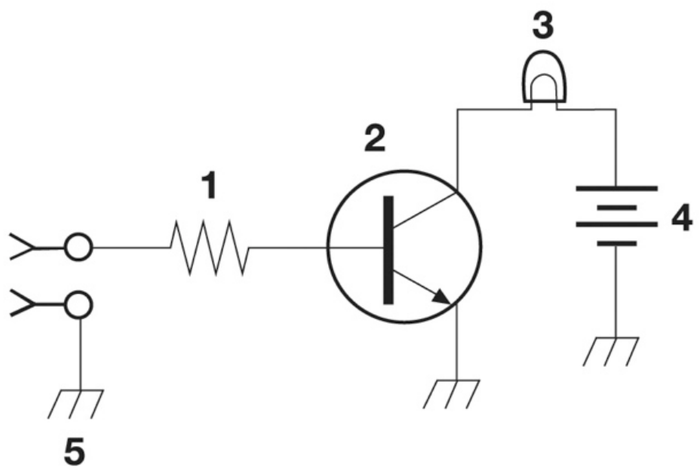

Figure T-1

What is component 1 in figure T1?

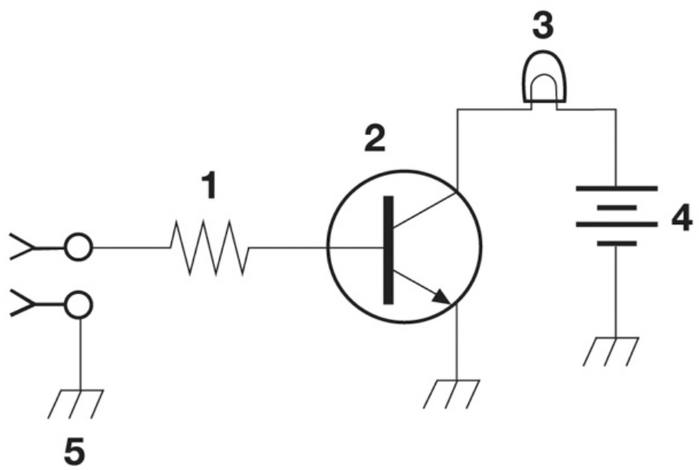

Figure T-1

Resistor

What is component 2 in figure T1?

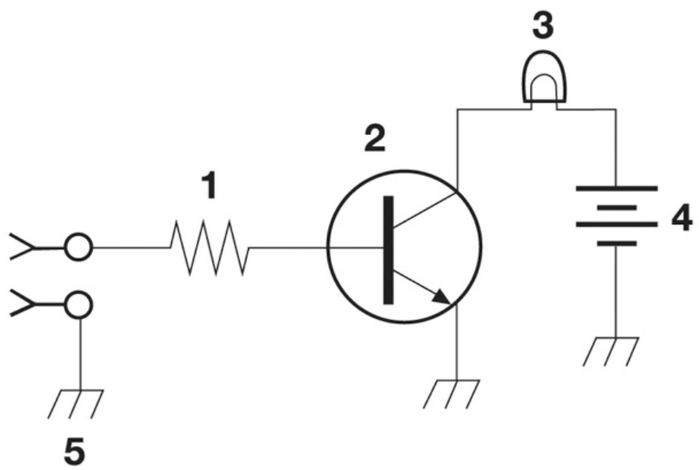

Figure T-1

What is component 2 in figure T1?

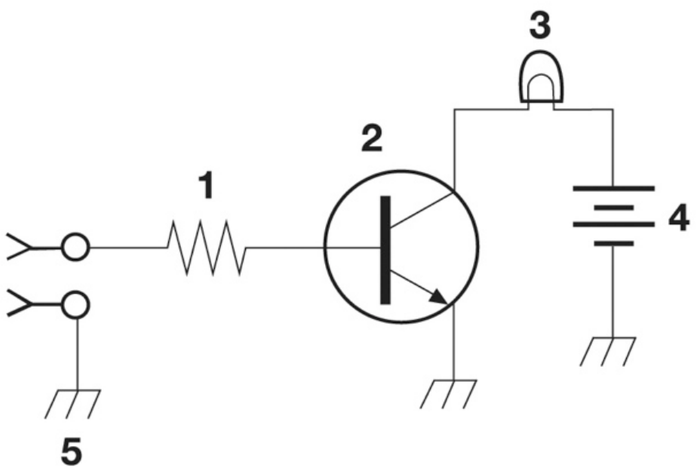

Figure T-1

Transistor

What is component 3 in figure T1?

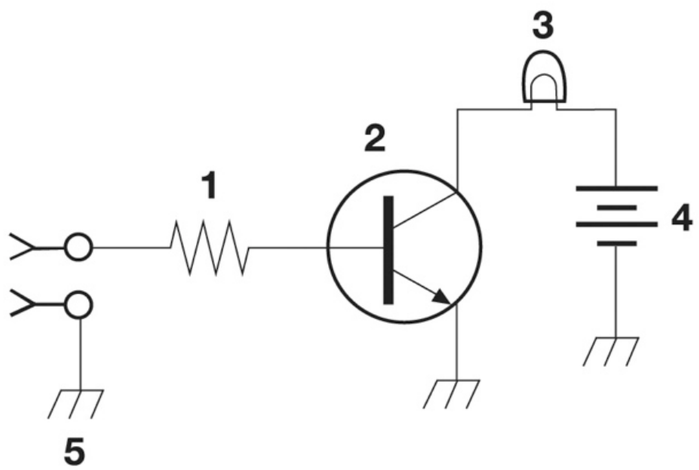

Figure T-1

What is component 3 in figure T1?

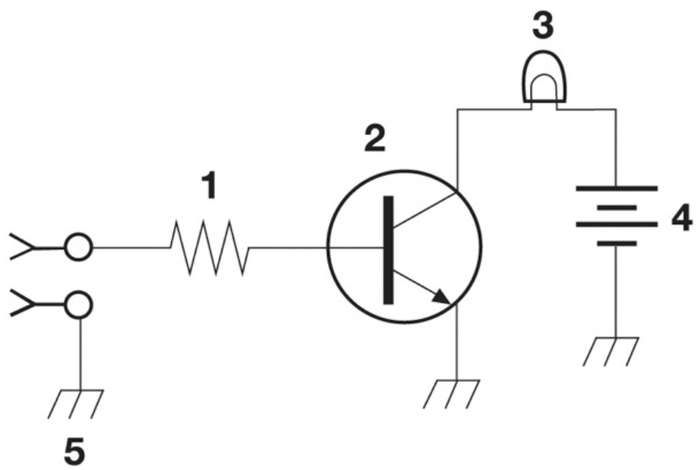

Figure T-1

Lamp

What is component 4 in figure T1?

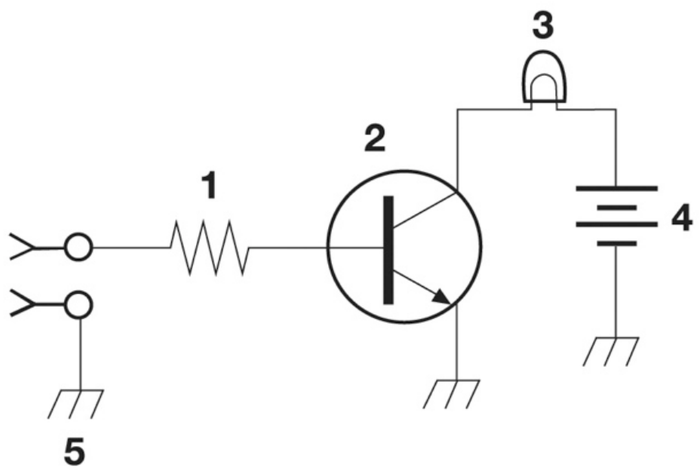

Figure T-1

What is component 4 in figure T1?

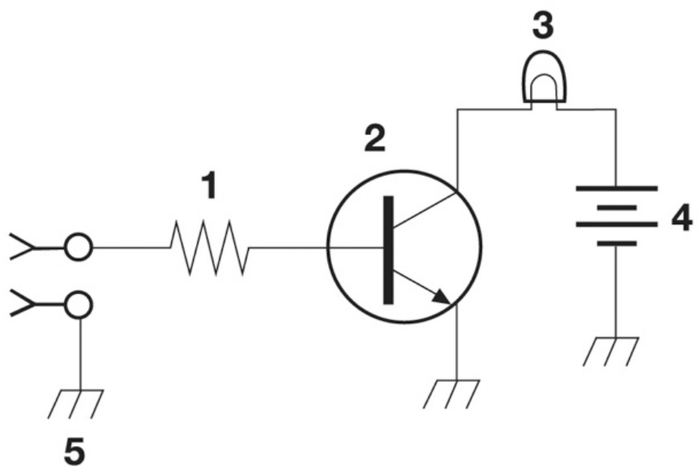

Figure T-1

Battery

What is component 6 in figure T2?

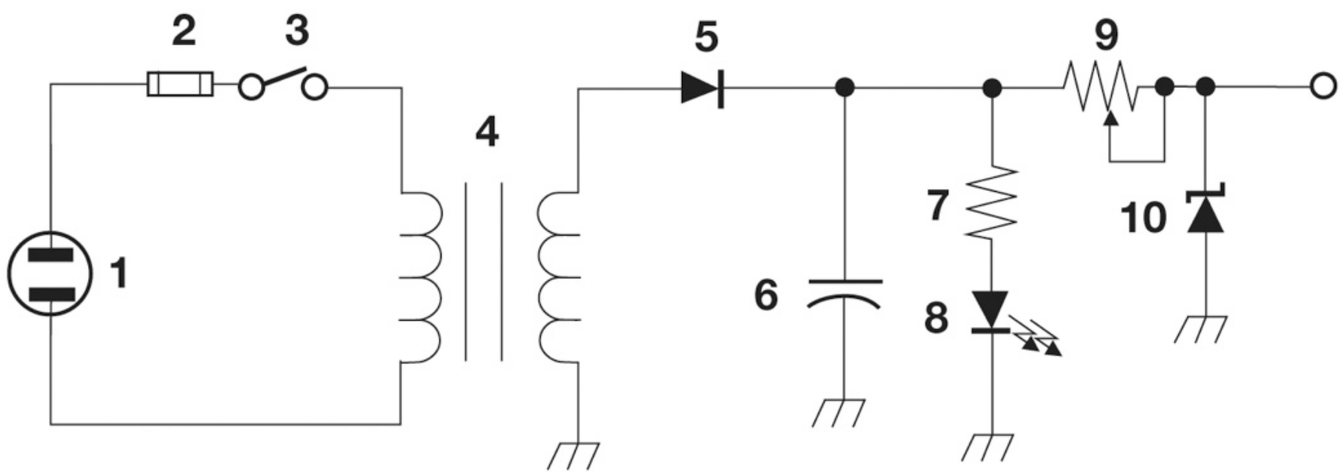

Figure T-2

What is component 6 in figure T2?

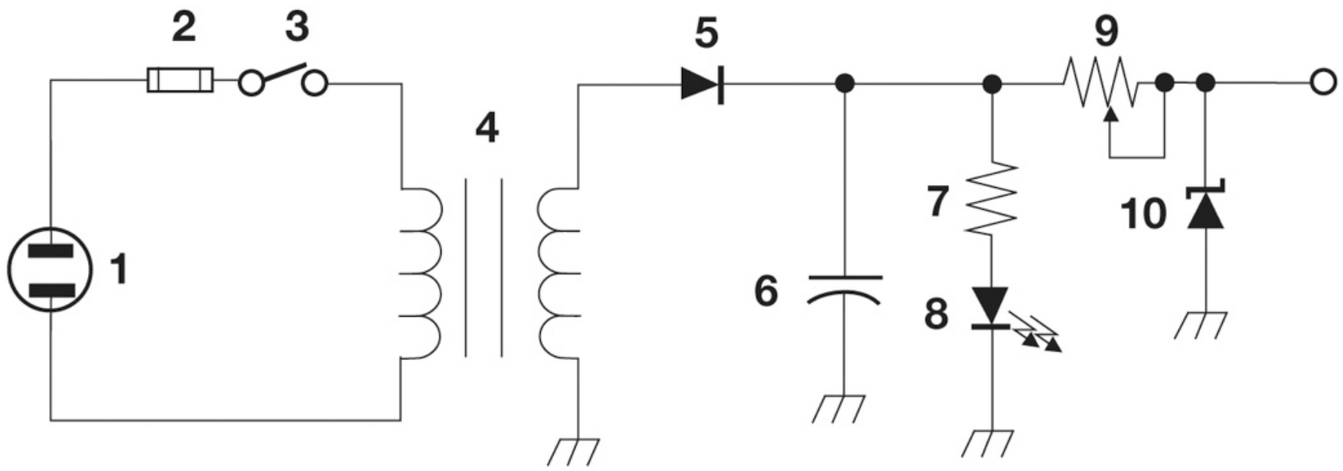

Figure T-2

Capacitor

What is component 8 in figure T2?

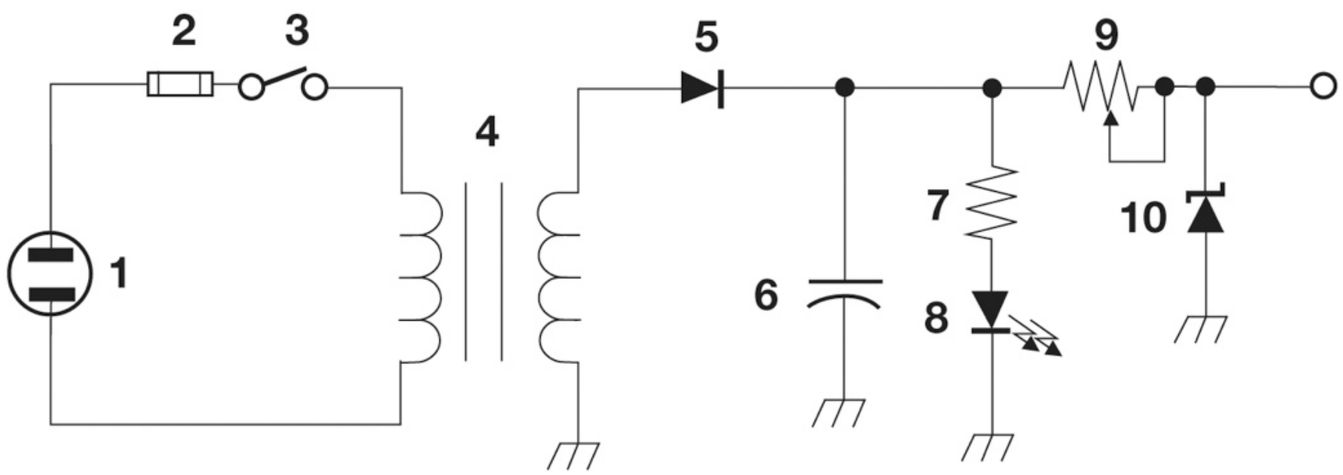

Figure T-2

What is component 8 in figure T2?

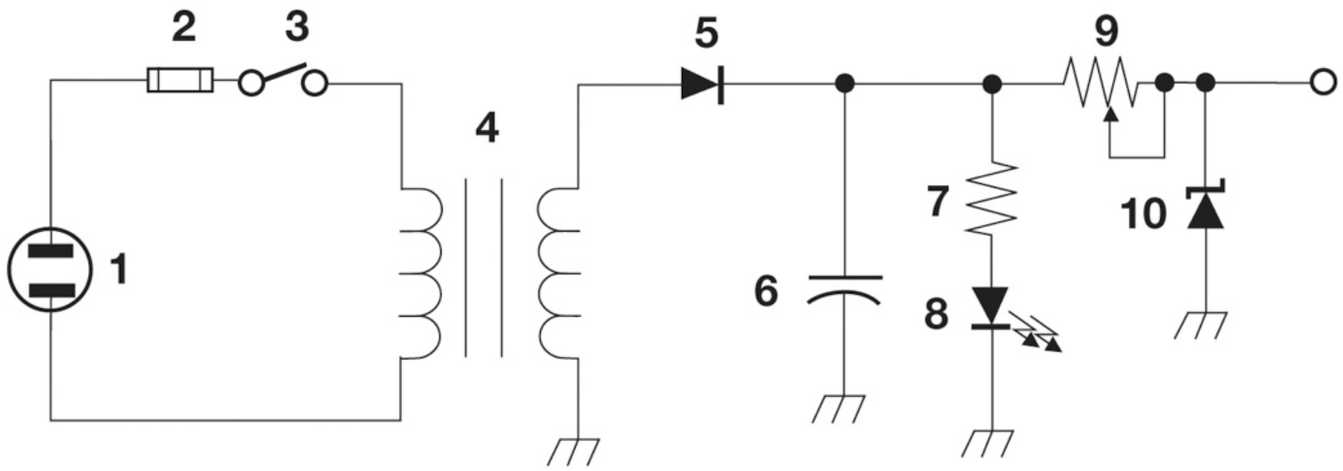

Figure T-2

Light emitting diode

What is component 9 in figure T2?

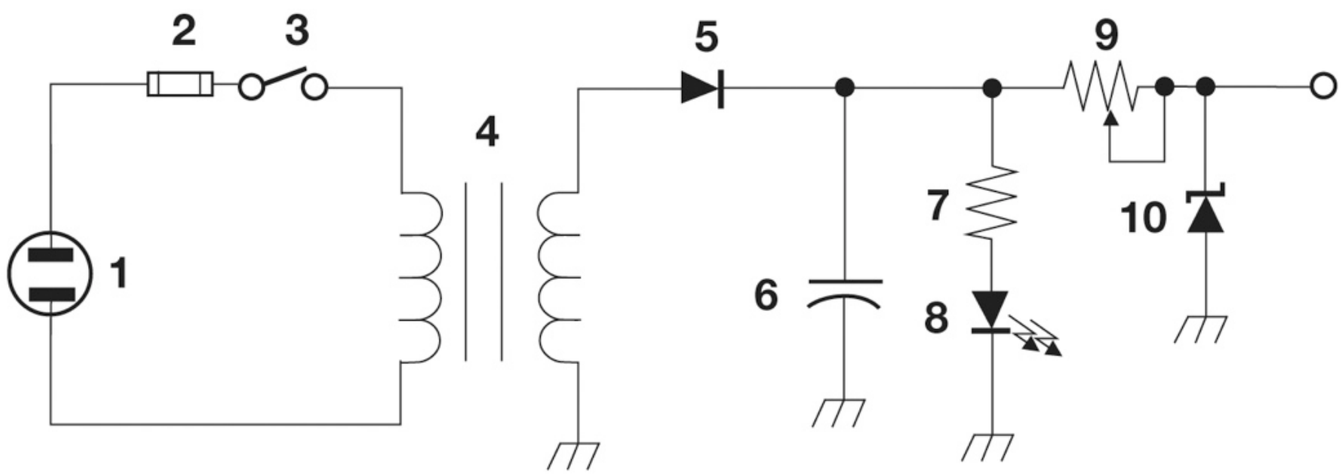

Figure T-2

What is component 9 in figure T2?

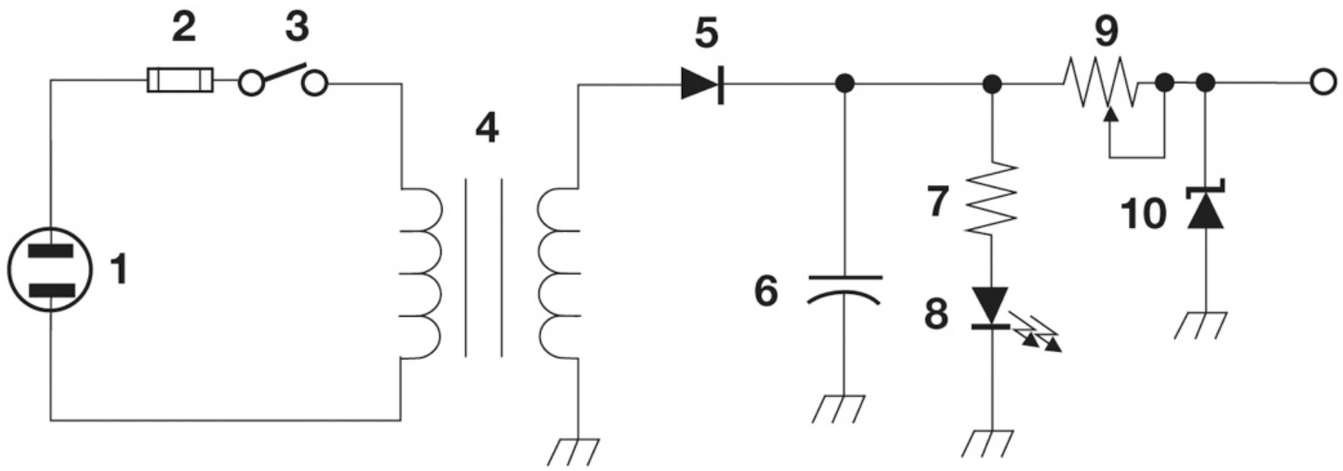

Figure T-2

Variable resistor

What is component 4 in figure T2?

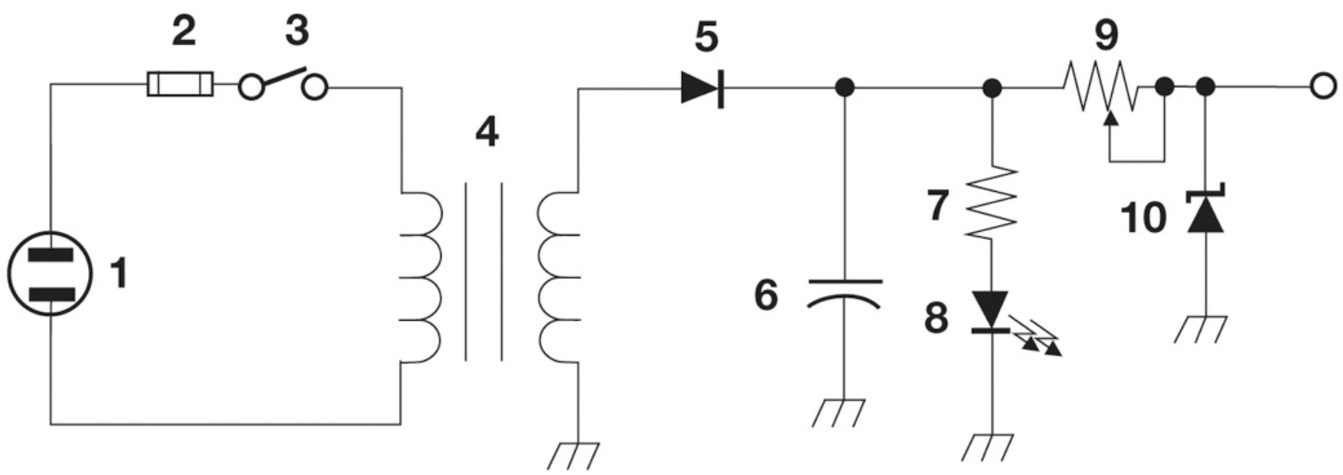

Figure T-2

What is component 4 in figure T2?

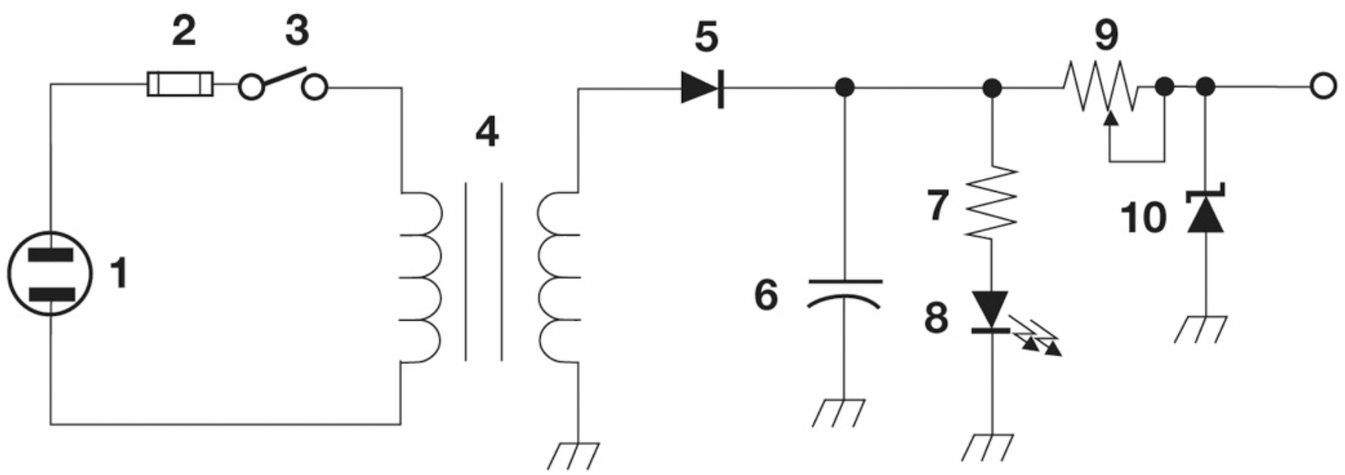

Figure T-2

Transformer

What is component 3 in figure T3?

Base

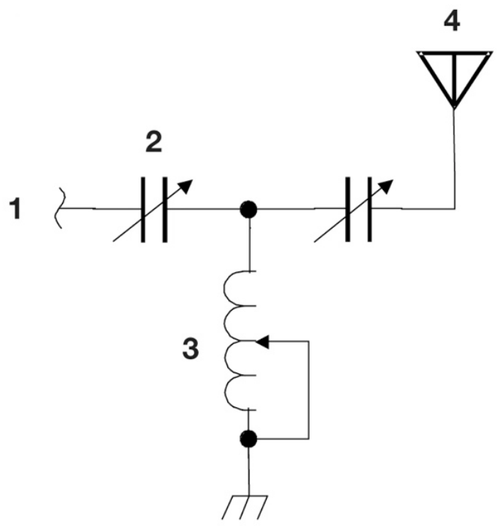

Figure T-3

What is component 3 in figure T3?

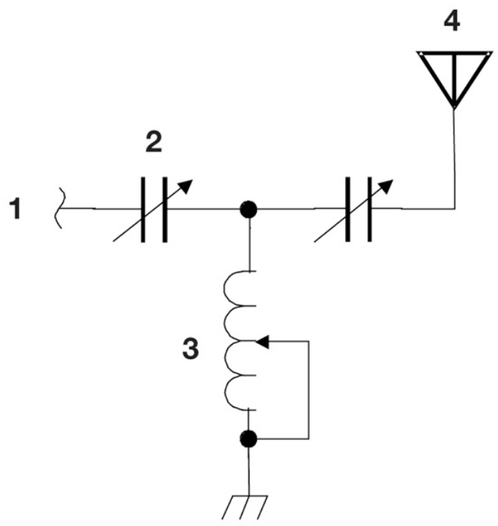

Figure T-3

Variable inductor

What is component 4 in figure T3?

Base

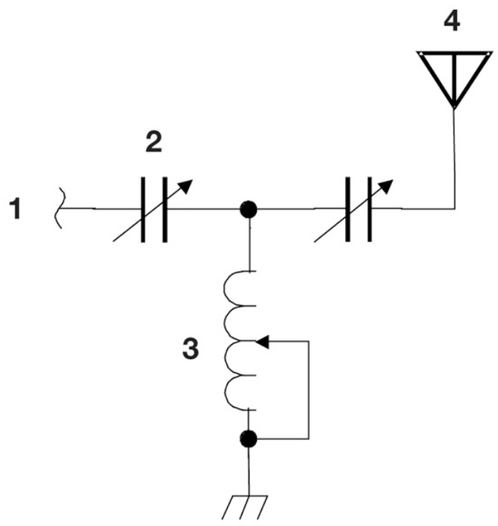

Figure T-3

What is component 4 in figure T3?

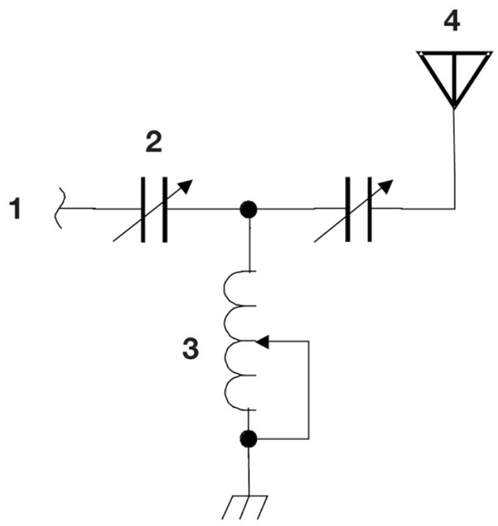

Figure T-3

Base

Antenna

What do the symbols on an electrical circuit schematic diagram represent?

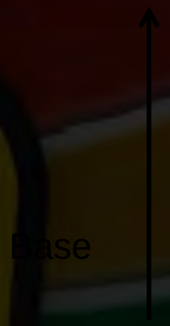

What do the symbols on an electrical circuit schematic diagram represent?

Base

Electrical components

Which of the following is accurately represented in electrical circuit schematic diagrams?

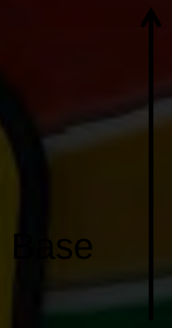

Which of the following is accurately represented in electrical circuit schematic diagrams?

The way components are interconnected

What devices or circuits change an alternating current into a varying direct current signal?

Base

What devices or circuits change an alternating current into a varying direct current signal?

Base

Rectifier

What best describes a relay?

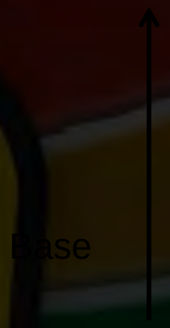

What best describes a relay?

A switch controlled by an electromagnet

What type of switch is represented by component 3 in figure T2?

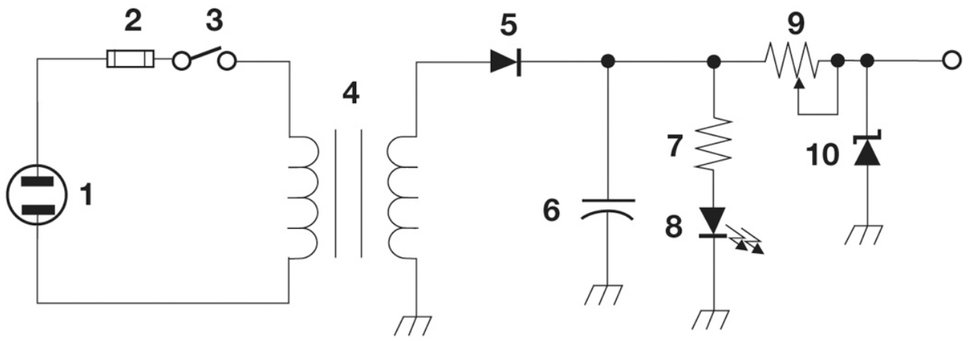

Figure T-2

What type of switch is represented by component 3 in figure T2?

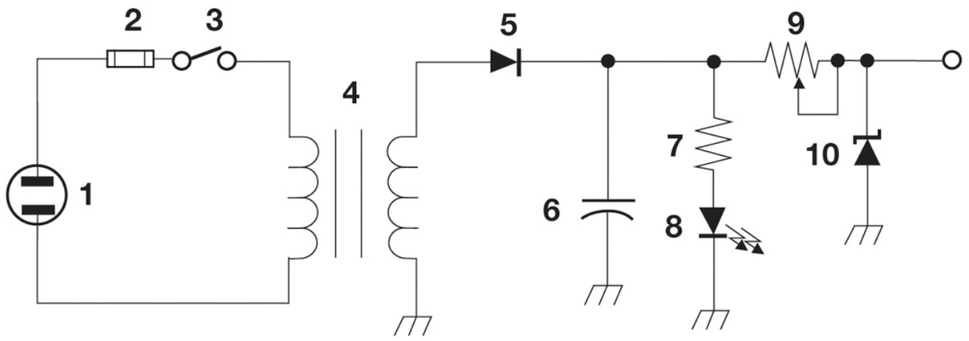

Figure T-2

Single-pole single-throw

What can be used to display signal strength on a numeric scale?

Base

What can be used to display signal strength on a numeric scale?

Base

Meter

What component is commonly used to change 120V AC house current to a lower AC voltage for other uses?

Base

What component is commonly used to change 120V AC house current to a lower AC voltage for other uses?

Base

Transformer

What is commonly used as a visual indicator?

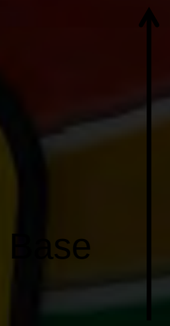

What is commonly used as a visual indicator?

Light Emitting Diode (LED)

What is used together with an inductor to make a tuned circuit?

Base

What is used together with an inductor to make a tuned circuit?

Base

Capacitor

What is the name of a device that combines several semiconductors and other components into one package?

Base

What is the name of a device that combines several semiconductors and other components into one package?

Base

Integrated circuit

What is the function of component 2 in Figure T1?

Base

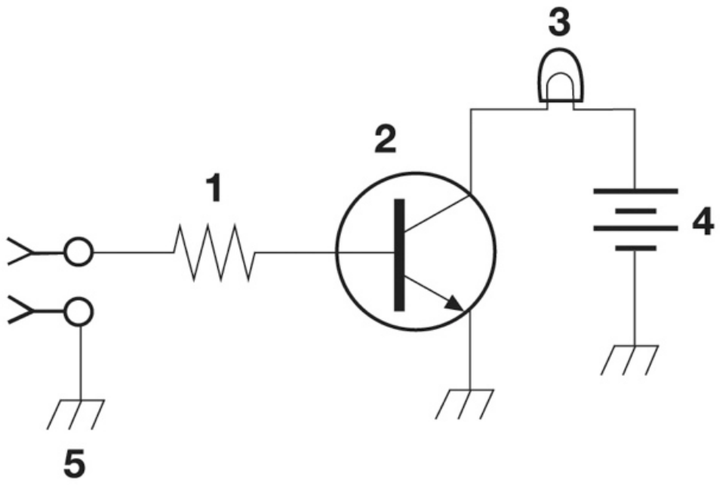

Figure T-1

What is the function of component 2 in Figure T1?

Base

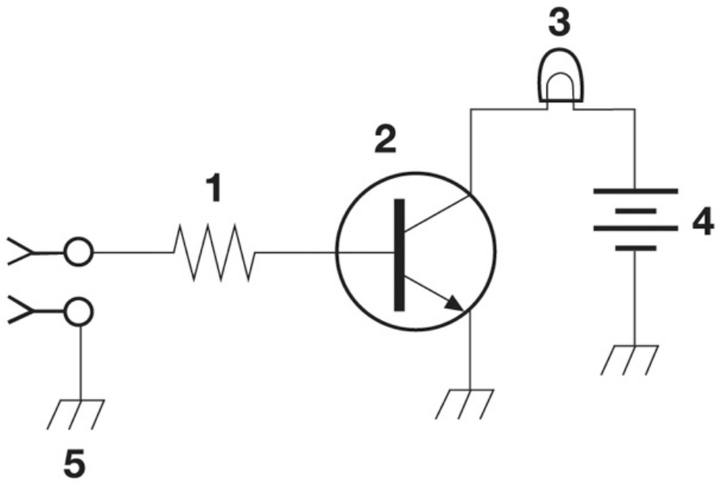

Figure T-1

Control the flow of current

What is a simple resonant or tuned circuit?

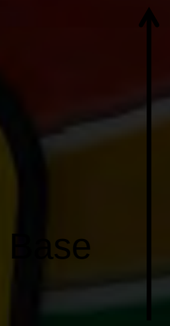

What is a simple resonant or tuned circuit?

An inductor and a capacitor connected in series or parallel to form a filter

What is the purpose of a fuse in an electrical circuit?

Base

What is the purpose of a fuse in an electrical circuit?

To interrupt power in case of overload

Why is it unwise to install a 20-ampere fuse in the place of a 5-ampere fuse?

Base

Why is it unwise to install a 20-ampere fuse in the place of a 5-ampere fuse?

Excessive current could cause a fire

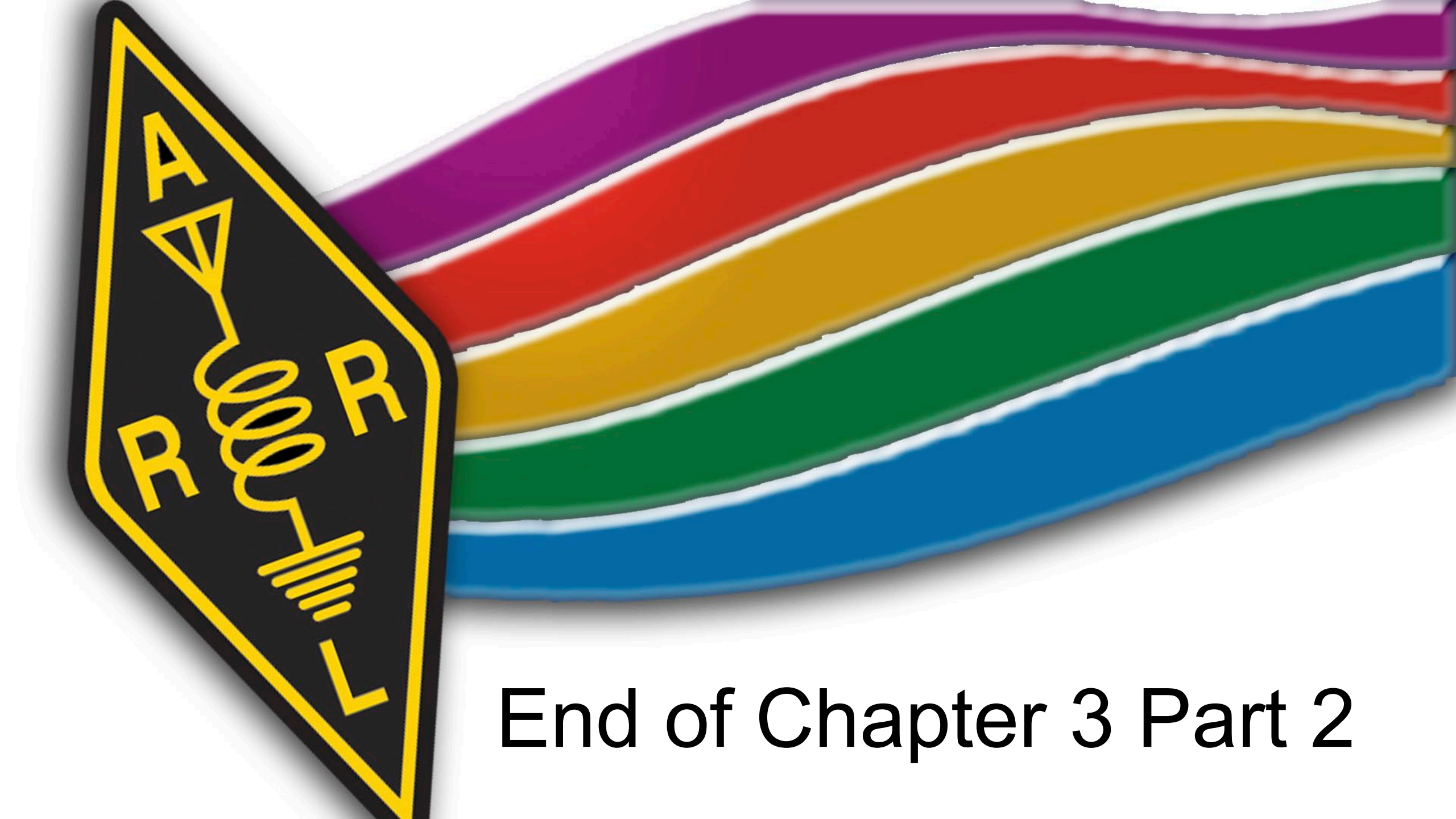

End of Chapter 3 Part 2

End of Module 6